Variable-Pitch Frames

THERMOSIPHON SOLAR WATER HEATER SYSTEMS

2.0 m^2 COLLECTOR ONLY INSTALLATIONS

2.6 m^2 COLLECTOR ONLY INSTALLATION

WIND REGIONS A TO C

INSTALLATION INSTRUCTIONS

ENVELOPE OR FOLDED-TRAY SOLAR COLLECTORS

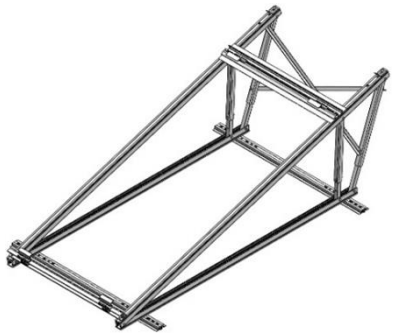

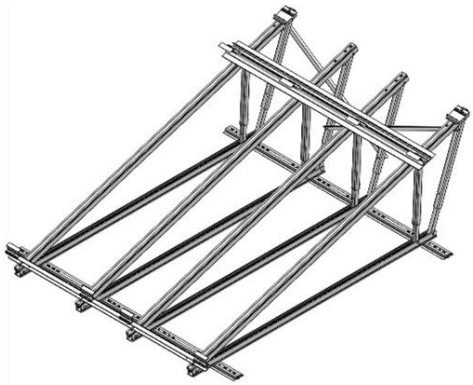

Thermosiphon Solar Water Heater Systems

2.0 m^2 Collector Only Installations

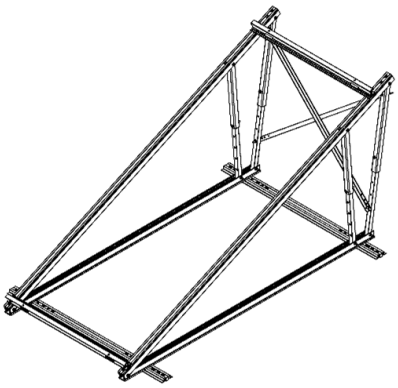

2.6 m^2 Collector Only Installation

ENVELOPE®
SOLAR COLLECTOR

This frame must be installed by a qualified person.
Please leave this guide with the householder or responsible officer.

RHEEM AUSTRALIA PTY LTD - ABN 21 098 823 511
SOLAHART INDUSTRIES PTY LTD - ABN 45 064 945 848
1 Alan Street Rydalmere NSW 2116 Australia
PO Box 7508 Silverwater NSW 2128 Australia

PATENTS

This Variable-Pitch frame may be protected by one or more patents or registered designs in the name of Solahart Industries Pty Ltd or Rheem Australia Pty Ltd.

CONTENTS

HOUSEHOLDER or RESPONSIBLE OFFICER – This installation instruction booklet is intended for the installer but you may find it of interest.

ABOUT THE VARIABLE-PITCH FRAME

MODEL TYPE

This installation instruction covers the installation of Variable-Pitch frames, using the "On Roof Mounting" method, suitable for thermosiphon solar water heaters and collector only installations with one or two 2.0m^2 collectors and collector only installations with one 2.6m^2 collector. The frames are certified for installation on a roof with a pitch not greater than 10°, including reverse pitch.

A 'one collector frame' is suitable for a tank and one collector installation or a one collector installation only, and a 'two collector frame' is suitable for a tank and two collector installation or a two collector installation only.

The overall dimensions of the frame with a thermosiphon solar water heater / collectors installed are:

- One Collector thermosiphon frame 1.7 m wide x 2.5 m long (deep)
- Two Collector thermosiphon frame 2.5 m wide x 2.5 m long (deep)
- One Collector 2.0 m² frame 1.3 m wide x 2.2 m long (deep)
- Two Collector 2.0 m² frame 2.1 m wide x 2.2 m long (deep)
- One Collector 2.6 m² frame 1.3 m wide x 2.5 m long (deep)

On Roof Mounting

The "On Roof Mounting" method is **not** suitable for tile, slate, shingle and similar roof types.

The installer must ensure the structural integrity of the building is not compromised and the roof structure is suitable to carry the full weight of the frame and thermosiphon solar water heater or collectors when full of water. If in doubt, consult a structural engineer, who may specify suitable strengthening of the roof structure.

The total weight of the frame and the thermosiphon solar water heater or collectors when full of water, depending upon the system installed, may be up to:

- 150 litre tank with one collector 310 kg
- 160 litre tank with one collector 301 kg
- 180 litre tank with one collector 351 kg
- 220 litre tank with two collectors 481 kg
- 300 litre tank with two collectors 586 kg
- One 2.0m^2 collector only 76 kg
- Two 2.0m^2 collector only 151 kg
- One 2.6m^2 collector only 76 kg

Wind Regions and Ratings

The frame, when installed using the "On Roof Mounting" method and the certified fixing methods and in accordance with these installation instructions, may be rated to:

Wind Region C

Terrain category	TC2, TC2.5	Ultimate wind speed	64.0 m/s	Height (h)	≤ 10 m	Wind Class *	N4/C2
Terrain category	T3	Ultimate wind speed	53.2 m/s	Height (h)	≤ 10 m	Wind Class *	N3/C1

* Wind Class has been assessed in accordance with AS 4055-2012 Wind loads for housing (including Amendment 1).

The suitability for the installation in a wind region will be based upon the terrain category, average building height, roof cladding, rafter / truss spacing, batten / purlin types and the fasteners used. Refer to "Steel Batten / Purlin Fixing Options" commencing on page 9 and "Timber Batten / Purlin Fixing Options" commencing on page 15.

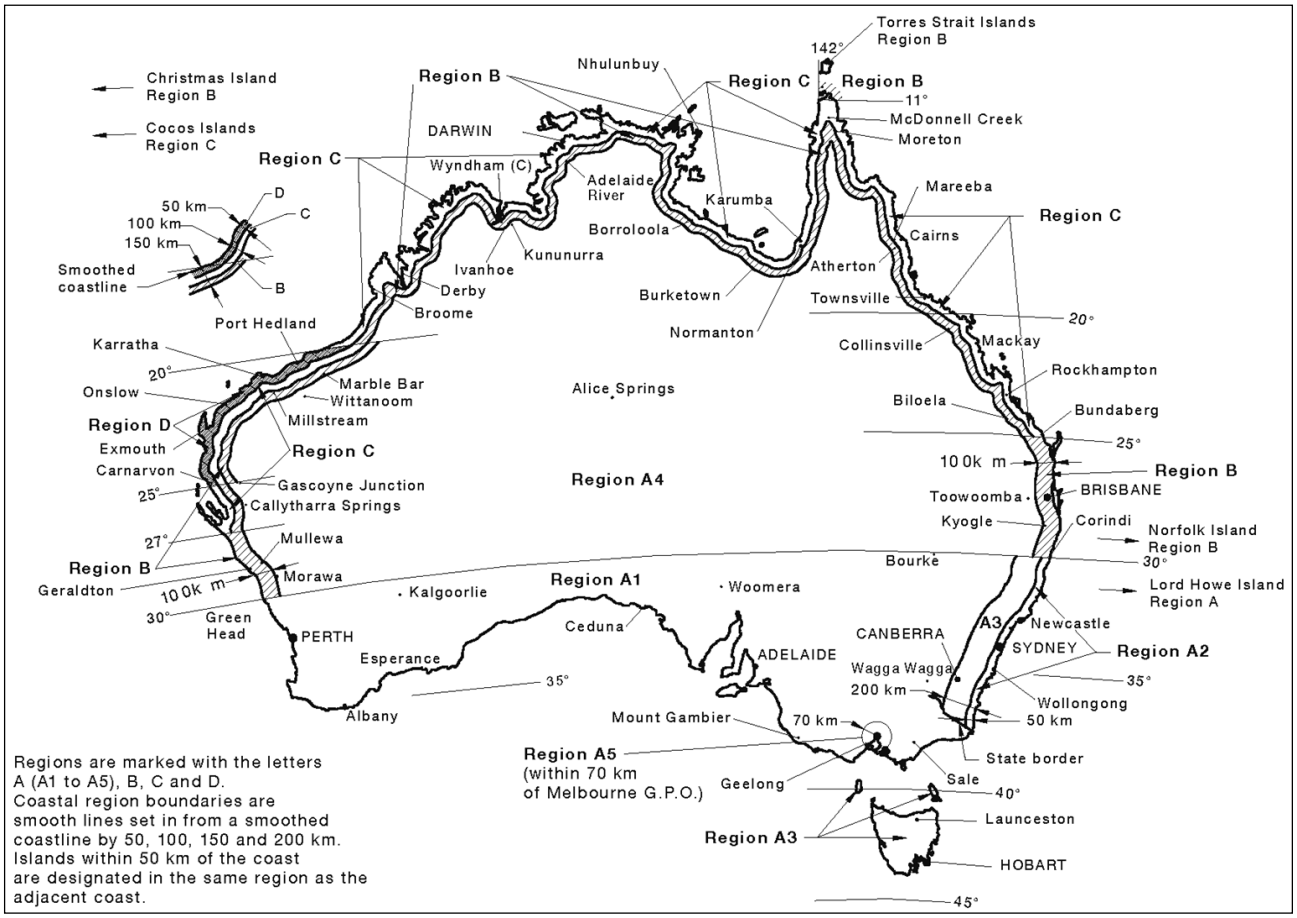

Wind Regions in Australia

LOCATION

This frame with a thermosiphon solar water heater or collector(s) only installed (where the "On Roof Mounting" method is used), subject to its design criteria and certification not being exceeded:

- may be suitable for installation in geographic locations up to and within Wind Region C as defined in the National Construction Code, Australian Standard AS 4055-2012 and the Australian / New Zealand Standard AS/NZS 1170.2:2011, and
- may provide an acceptable method of installation where it is necessary to satisfy the requirements of the National Construction Code, or equivalent requirements.

Orientation

Refer to the Installation Instructions and Owner's Guide supplied with the solar water heater tank or collector mounting kit in order to determine the most suitable direction for facing the system.

Note: The Base Plates of the frame are designed to be installed perpendicular to the profile of the roof sheet cladding. The fixing holes in the Base Plates are positioned to sit directly over the crests of some common roofing profiles. This means the orientation of the frame will be in the direction of the slope of the roof.

Choose a mounting location with direction in mind that will also allow the frame to be located over roof battens / purlins which are continuous over not less than three rafters or trusses (for either a one or two collector frame) and provide the Base Plate sub-assemblies with suitable fixing access to the roof battens / purlins.

Positioning the Frame – Set-Back
The frame must be installed with a minimum distance or set-back from the edge of the roof (discontinuity) to the solar storage tank and solar collector on all four sides.

- The minimum set-back from a discontinuity is the minimum dimension of 0.2b or 0.2d or 1h.
- A discontinuity is the outside edge of the roof.
- If the roof has an eave, the set-back from the edge of the roof must be no less than the depth of the eave.

Refer to "Model Type" on page 4 for the overall dimensions of a solar water heater on a frame.

If the frame is required to be installed nearer to the eaves or gables of the roof than the minimum set-back distance allows (i.e. in the Installation Exclusion Zone), then further structural engineering assessment is required. Consult a structural engineer for an assessment before installation commences.

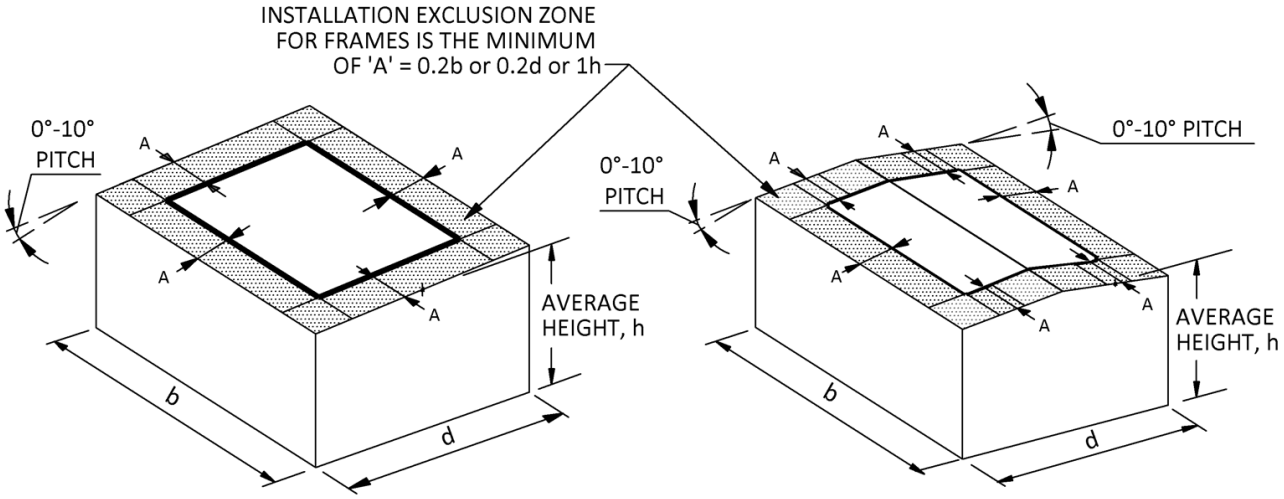

Set-backs from eaves and gables

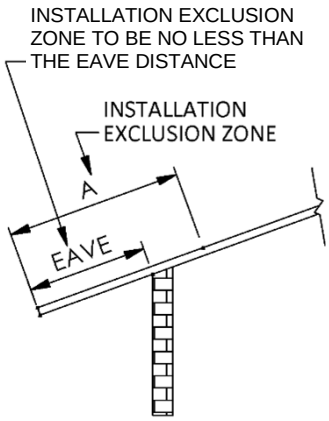

Set-back from roof edge at eaves

Building Aspect Ratio
The building aspect ratio is the ratio of average roof height (h) to the shorter of the building depth (d) or width (b), i.e. h / (d or b) (refer to the diagram 'Set-backs from eaves and gables' on page 6).

The certification for the Variable-Pitch frames is not affected by the building aspect ratio. It is not necessary to calculate the building aspect ratio to determine the frames suitability for the installation.

Anywhere on Roof and Frame Offset Installations

A frame may be suitable for installation 'Anywhere on Roof' or limited to a 'Frame Offset' installation depending upon the spacing between the rafters / trusses, the type of batten used, the wind region and height of the installation.

The tables under Steel Batten / Purlin Fixing Options on page 9 and Timber Batten / Purlin Fixing Options on page 15 show whether an installation can be anywhere on roof (AOR) or whether the installation cannot exceed a maximum frame offset distance from the adjacent rafter / truss.

An anywhere on roof installation can be installed on the roof without reference to the position of the rafters / trusses, so long as it does not encroach within the installation exclusion zone – refer to "Positioning the Frame – Set-Back" on page 6. Refer to the Single collector frame – anywhere on roof and Double collector frame – anywhere on roof diagrams on page 7.

A frame offset installation references a maximum distance of 100 mm between the centreline of one of the two inside Bottom Chords of a two collector frame or either of the Bottom Chords of a one collector frame and the centreline of the adjacent rafter / truss and without encroachment within the installation exclusion zone. A Bottom Chord is the member connected to both the front and rear Base Plates. Refer to the Single collector frame – frame offset and Double collector frame – frame offset diagrams on page 7.

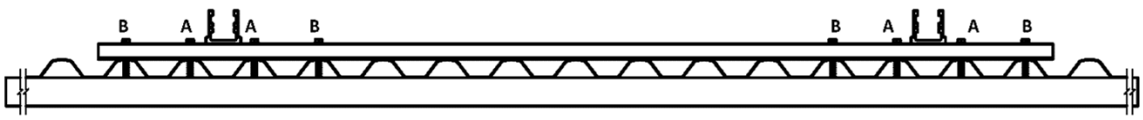

Single collector frame – anywhere on roof

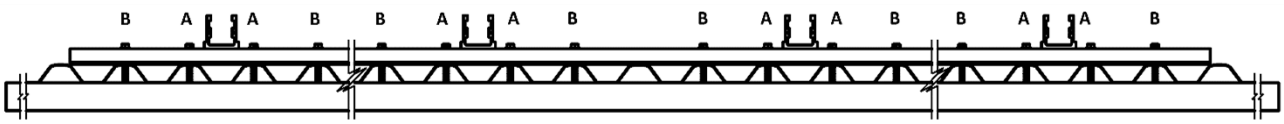

Double collector frame – anywhere on roof

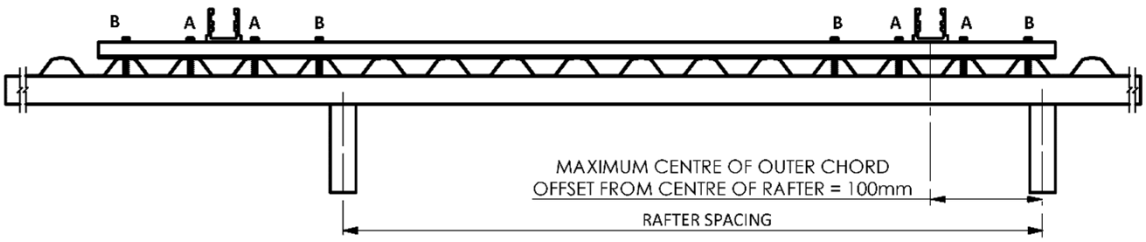

Single collector frame – frame offset

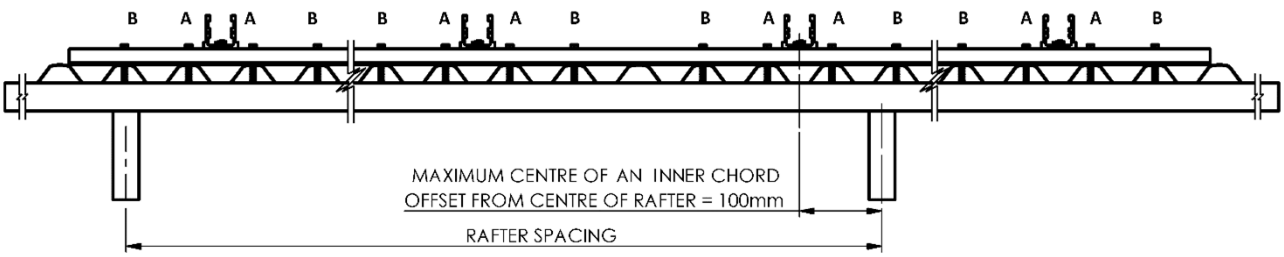

Double collector frame – frame offset

IMPORTANT NOTES, GENERAL DESIGN CRITERIA AND LIMITATIONS

- These frames are designed for the installation of:
  - thermosiphon solar water heaters with one or two 2.0m^2 Envelope or folded-tray solar collectors,
  - 2.0m^2 collector only installations with one or two 2.0m^2 Envelope or folded-tray solar collectors,
  - 2.6m^2 collector only installations with one 2.6m^2 Envelope solar collector.
- The roof construction should be verified / assessed to ensure that it can support the additional loads imposed by the installation of the thermosiphon solar water heater or collectors and the frame.
- The frame is suitable for installations on metal roof profiles with crest to crest measurements from 41.5 mm to 320 mm.
- The installer is to provide the specified fasteners to connect the frame to the roof battens / purlins.
- The installation shall be in accordance with these installation instructions, the NCC, regulatory authority requirements and local codes.
- The certifications of the frames cover their installation in Australia.

Design Criteria

- The frames have engineering certification for installation in Wind Region C (AS/NZS1170.2:2001 Structural Design Actions Part 2 – Wind Actions (incl Amendment 1, 2, 3) Figure 3.1(A)) based on;
  - roof pitch angles up to and including 10°, including reverse pitch,
  - a 25 year design life and building importance level 2,
  - an ultimate design wind speed 64.0 m/s with a 200 year average recurrence interval,
  - terrain categories 2, 2.5, 3,
  - average roof height up to and including 10 m,
  - M_d (wind direction multiplier) = M_s (shielding multiplier) = M_t (topographic multiplier) = 1.0, any direction, no shielding, flat terrain
  - C_{fig} (aerodynamic shape factor)

Pitch Angle	Upward *	Downward*
15°	-1.50 / -1.00	-0.20 / +0.80
17.5°	-1.70 / -1.05	-0.167 / +0.93
20°	-1.90 / -1.10	-0.13 / +1.07
22.5°	-2.10 / -1.15	-0.10 / +1.20

Pitch Angle	Upward *	Downward*
25°	-2.30 / -1.20	-0.07 / +1.33
27.5°	-2.50 / -1.25	-0.03 / +1.47
30°	-2.70 / -1.30	0.00 / +1.60

* upper half / lower half of collector

Limitations

- The certification covers the installation on an enclosed building or on the extension of its roofline over a covered area, with a minimum set-back from the edge of the roof to the solar storage tank and solar collector (refer to "Positioning the Frame – Set-Back" on page 6).
  - **Note:** If the frame is to be mounted nearer to the edge of the roof and the minimum set-back cannot be achieved, then further structural engineering assessment is required. Consult a structural engineer for an assessment.
  - The frame is not rated for installation on a free roof or canopy as defined in AS 1170.2:2011 Appendix A.
- The maximum truss and rafter spacings, types of roof battens / purlins and types and number of fasteners required dependent on the batten / purlin type, based on average roof height and terrain category, are specified in "Steel Batten / Purlin Fixing Options" commencing on page 9 and "Timber Batten / Purlin Fixing Options" commencing on page 15,
- The connection of the frame to the roof battens / purlins must be in accordance with the methods outlined in these installation instructions.

- The roof battens / purlins must be continuous over not less than three rafters or trusses for both one and two collector frames. The frames certification in Wind Region C covers a centre to centre distance between the two roof battens / purlins, to which the Base Plates are secured, from 1590 mm to 2010 mm.
    - No connection point of the Base Plate to the batten / purlin is to be over a cantilevered part of a batten / purlin.

STEEL BATTEN / PURLIN FIXING OPTIONS

Steel Batten / Purlin Fixings – Wind Region C

- **offset** = a maximum distance of 100 mm between the centreline of one of the two inside Bottom Chords of a two collector frame or either of the Bottom Chords of a one collector frame and the centreline of the adjacent rafter / truss and without encroachment within the installation exclusion zone – refer to "Positioning the Frame – Set-Back" on page 6.
- **AOR** = does not have an offset requirement and can be installed anywhere on roof except for encroachment within the installation exclusion zone – refer to "Positioning the Frame – Set-Back" on page 6.
- Refer to diagram Bottom Chord to Base Plate Connection Positions on page 49 for acceptable positions of the front and rear Base Plates.
- Steel battens / purlins to be fixed to the rafter / truss in accordance with the batten / purlin manufacturers specifications or as detailed in these installation instructions. Batten to be fixed with strapping and or fixing screws to the rafter / truss, in accordance with table 9.25 of AS 1684.3-2010 Residential timber-framed construction Part 3: Cyclonic Areas (Incorporating Amendment No. 1). Minimum uplift capacity required for batten connection is 13 kN.
- Steel battens to be:
    - 0.75 mm BMT G550 steel top hat section, with a 100 mm length of 40 x 40 x 1.6 mm SHS between the top hat section and each rafter / truss under and adjacent to the Base Plate location. The SHS is to be centred over the rafter / truss, preferably with its seam weld on the underside in the event of screw penetration, and secured by a screw through either side of the top hat section into the SHS.

      Refer to Detail – Metal Screw into Top Hat Batten with 100 mm length SHS and Detail – Bolt into Top Hat Batten with 100 mm length SHS on page 24.

      or
    - C450LO 40 x 40 x 2.5 mm SHS. The SHS battens are additional to the battens used for the roof cladding connection. The maximum rafter spacings and frame fixings in the following tables have been based on the SHS battens taking the uplift load from the frames only and not of the roof cladding.

      Refer to Detail – Teks Screw into Steel SHS Batten and Detail – Bolt into Steel SHS Batten on page 25.
- Fasteners may be either:
    - Metal self-drilling screws for fixing to 0.75 mm BMT G550 Steel Battens, or
    - Teks screws for fixing to C450LO 40 x 40 x 2.5 SHS Steel Batten, or
    - M8 / 5/16" bolts, washers and nuts fixing to either 0.75 mm BMT G550 or C450LO 40 x 40 x 2.5 SHS Steel Battens.

  Refer to the section "Fasteners and Requirements" commencing on page 21 for the specification of the metal self-drilling screws, Teks screws and bolts.
- Refer to the following tables for the number of fasteners required per Base Plate and for limitations.
- The steel batten / purlin fixing options for Wind Region C can also be used for Wind Regions A and B.
- Refer to "Dimensional Drawings" commencing on page 45 for the available angles of inclination.

THERMOSIPHON SINGLE COLLECTOR VARIABLE-PITCH FRAME Wind Region C – minimum 0.75 mm BMT G550 Steel Batten Fixing Options						
terrain category	max average height	max rafter and truss spacing	off-set or anywhere on roof (AOR) position	max frame angle single collector	minimum fasteners per front base plate	minimum fasteners per rear base plate
TC2	h ≤ 10m	1000	offset	17.5	4	8
		800	AOR	17.5	4	8
		700	AOR	20	4	8
		600	AOR	22.5	4	8
			AOR	25	4	4 x bolts only
	h ≤ 5m	1100	offset	15	4	4
		1000	offset	25	4	8
			offset	17.5	4	4
			AOR	15	4	4
		900	AOR	17.5	4	4
			AOR	20	4	8
		800	AOR	22.5	4	8
		700	AOR	25	4	8
TC2.5	h ≤ 10m	1100	offset	15	4	4
		1000	offset	25	4	8
			offset	17.5	4	4
			AOR	15	4	4
		900	AOR	20	4	8
			AOR	17.5	4	4
		800	AOR	22.5	4	8
		700	AOR	25	4	8
	h ≤ 5m	1100	offset	20	4	4
			AOR	17.5	4	4
		1000	offset	25	4	8
			AOR	20	4	4
		900	AOR	22.5	4	8
		800	AOR	25	4	8
TC3	h ≤ 10m	1200	offset	17.5	4	4
		1100	offset	22.5	4	4
			AOR	20	4	4
		1000	offset	25	4	8
			AOR	22.5	4	4
		900	AOR	25	4	8
	h ≤ 5m	1200	offset	17.5	4	4
		1100	offset	22.5	4	4
			AOR	20	4	4
		1000	offset	25	4	8
			AOR	22.5	4	4
		900	AOR	25	4	8

The minimum 8 x metal screws can be replaced by 4 x M8 / 5/16” bolts, washers and nuts.

THERMOSIPHON SINGLE COLLECTOR VARIABLE-PITCH FRAME Wind Region C – C450LO 40 x 40 x 2.5 SHS Steel Batten Fixing Options						
terrain category	max average height	max rafter and truss spacing	off-set or anywhere on roof (AOR) position	max frame angle single collector	minimum fasteners per front base plate	minimum fasteners per rear base plate
TC2	h ≤ 10m	1200	AOR	25	4	4
	h ≤ 5m	1200	AOR	25	4	4
TC2.5	h ≤ 10m	1200	AOR	25	4	4
	h ≤ 5m	1200	AOR	25	4	4
TC3	h ≤ 10m	1200	AOR	25	4	4
	h ≤ 5m	1200	AOR	25	4	4

THERMOSIPHON DOUBLE COLLECTOR VARIABLE-PITCH FRAME
Wind Region C – minimum 0.75 mm BMT G550 Steel Batten Fixing Options

terrain category	max average height	max rafter and truss spacing	off-set or anywhere on roof (AOR) position	max frame angle double collector	minimum fasteners per front base plate	minimum fasteners per rear base plate
TC2	h ≤ 10m	700	AOR	17.5	8	16
		600	offset	25	8	8 x bolts only
			AOR	22.5	8	8 x bolts only
			AOR	20	8	16
	h ≤ 5m	900	AOR	15	8	8
		800	offset	20	8	16
			AOR	17.5	8	16
		700	AOR	25	8	16
TC2.5	h ≤ 10m	900	AOR	15	8	8
		800	offset	20	8	16
			AOR	17.5	8	16
		700	AOR	25	8	16
	h ≤ 5m	1000	offset	15	8	8
		900	AOR	17.5	8	16
			AOR	15	8	8
		800	AOR	22.5	8	16
		700	AOR	25	8	16
TC3	h ≤ 10m	1100	offset	15	8	8
		1000	AOR	15	8	8
		900	AOR	20	8	16
			AOR	17.5	8	8
		800	AOR	25	8	16
	h ≤ 5m	1100	offset	15	8	8
		1000	AOR	15	8	8
		900	AOR	20	8	16
			AOR	17.5	8	8
		800	AOR	25	8	16

The minimum 16 x metal screws can be replaced by 8 x M8 / 5/16” bolts, washers and nuts.

THERMOSIPHON DOUBLE COLLECTOR VARIABLE-PITCH FRAME
Wind Region C – C450LO 40 x 40 x 2.5 SHS Steel Batten Fixing Options

terrain category	max average height	max rafter and truss spacing	off-set or anywhere on roof (AOR) position	max frame angle double collector	minimum fasteners per front base plate	minimum fasteners per rear base plate
TC2	h ≤ 10m	1200	AOR	25	8	8
	h ≤ 5m	1200	AOR	25	8	8
TC2.5	h ≤ 10m	1200	AOR	25	8	8
	h ≤ 5m	1200	AOR	25	8	8
TC3	h ≤ 10m	1200	AOR	25	8	8
	h ≤ 5m	1200	AOR	25	8	8

2.0M² SINGLE COLLECTOR VARIABLE-PITCH FRAME
Wind Region C – minimum 0.75 mm BMT G550 Steel Batten Fixing Options

terrain category	max average height	max rafter and truss spacing	off-set or anywhere on roof (AOR) position	max frame angle single collector	minimum fasteners per front base plate	minimum fasteners per rear base plate
TC2	h ≤ 10m	700	offset	22.5	8	8
			AOR	20	8	8
		600	AOR	25	8	8
			AOR	30	8	4 x bolts only
	h ≤ 5m	1000	offset	25	4	8
		800	AOR	22.5	4	8
		700	AOR	30	4	8
TC2.5	h ≤ 10m	1000	offset	25	4	8
		800	AOR	20	4	8
		700	offset	30	4	8
			AOR	25	4	8
		600	AOR	30	4	8
	h ≤ 5m	1000	offset	30	4	8
		900	AOR	20	4	8
		800	AOR	25	4	8
		700	AOR	30	4	8
TC3	h ≤ 10m	1000	offset	30	4	8
		900	AOR	22.5	4	8
		800	AOR	30	4	8
	h ≤ 5m	1000	offset	30	4	8
		900	AOR	22.5	4	8
		800	AOR	30	4	8

The minimum 8 x metal screws can be replaced by 4 x M8 / 5/16” bolts, washers and nuts

2.0M² SINGLE COLLECTOR VARIABLE-PITCH FRAME
Wind Region C – C450LO 40 x 40 x 2.5 SHS Steel Batten Fixing Options

terrain category	max average height	max rafter and truss spacing	off-set or anywhere on roof (AOR) position	max frame angle single collector	minimum fasteners per front base plate	minimum fasteners per rear base plate
TC2	h ≤ 10m	1200	AOR	30	4	4
	h ≤ 5m	1200	AOR	30	4	4
TC2.5	h ≤ 10m	1200	AOR	30	4	4
	h ≤ 5m	1200	AOR	30	4	4
TC3	h ≤ 10m	1200	AOR	30	4	4
	h ≤ 5m	1200	AOR	30	4	4

2.0M² DOUBLE COLLECTOR VARIABLE-PITCH FRAME **Wind Region C – minimum 0.75 mm BMT G550 Steel Batten Fixing Options**						
terrain category	max average height	max rafter and truss spacing	off-set or anywhere on roof (AOR) position	max frame angle double collector	minimum fasteners per front base plate	minimum fasteners per rear base plate
TC2	h ≤ 10m	700	AOR	20	16	16
		600	AOR	25	16	16
			AOR	30	16	8 x bolts only
	h ≤ 5m	800	AOR	20	8	16
		700	AOR	30	8	16
TC2.5	h ≤ 10m	800	AOR	20	8	16
		700	AOR	25	8	16
		600	AOR	30	8	16
	h ≤ 5m	800	offset	25	8	16
			AOR	22.5	8	16
		700	AOR	30	8	16
TC3	h ≤ 10m	900	AOR	20	8	16
		800	offset	30	8	16
			AOR	25	8	16
		700	AOR	30	8	16
	h ≤ 5m	900	AOR	20	8	16
		800	offset	30	8	16
			AOR	25	8	16
		700	AOR	30	8	16

The minimum 16 x metal screws can be replaced by 8 x M8 / 5/16” bolts, washers and nuts.

2.0M² DOUBLE COLLECTOR VARIABLE-PITCH FRAME **Wind Region C – C450LO 40 x 40 x 2.5 SHS Steel Batten Fixing Options**						
terrain category	max average height	max rafter and truss spacing	off-set or anywhere on roof (AOR) position	max frame angle double collector	minimum fasteners per front base plate	minimum fasteners per rear base plate
TC2	h ≤ 10m	1200	AOR	30	8	8
	h ≤ 5m	1200	AOR	30	8	8
TC2.5	h ≤ 10m	1200	AOR	30	8	8
	h ≤ 5m	1200	AOR	30	8	8
TC3	h ≤ 10m	1200	AOR	30	8	8
	h ≤ 5m	1200	AOR	30	8	8

2.6 M² SINGLE COLLECTOR VARIABLE-PITCH FRAME
Wind Region C – minimum 0.75 mm BMT G550 Steel Batten Fixing Options

terrain category	max average height	max rafter and truss spacing	off-set or anywhere on roof (AOR) position	max frame angle single collector	minimum fasteners per front base plate	minimum fasteners per rear base plate
TC2	h ≤ 10m	600	AOR	17.5	4	4 x bolts only
			AOR	15	4	8
	h ≤ 5m	1000	offset	15	4	8
		700	AOR	17.5	4	8
		600	AOR	22.5	4	4 x bolts only
TC2.5	h ≤ 10m	900	offset	15	4	8
		700	AOR	17.5	4	8
		600	AOR	22.5	4	4 x bolts only
	h ≤ 5m	1000	offset	17.5	4	8
		800	AOR	15	4	8
		700	AOR	20	4	8
		600	AOR	25	4	4 x bolts only
TC3	h ≤ 10m	1000	offset	22.5	4	8
		800	AOR	17.5	4	8
		700	offset	25	4	4 x bolts only
			AOR	22.5	4	8
		600	AOR	25	4	4 x bolts only
	h ≤ 5m	1000	offset	22.5	4	8
		800	AOR	17.5	4	8
		700	offset	25	4	4 x bolts only
			AOR	22.5	4	8
		600	AOR	25	4	4 x bolts only

The minimum 8 x metal screws can be replaced by 4 x M8 / 5/16” bolts, washers and nuts.

2.6M² SINGLE COLLECTOR VARIABLE-PITCH FRAME
Wind Region C – C450LO 40 x 40 x 2.5 SHS Steel Batten Fixing Options

terrain category	max average height	max rafter and truss spacing	off-set or anywhere on roof (AOR) position	max frame angle single collector	minimum fasteners per front base plate	minimum fasteners per rear base plate
TC2	h ≤ 10m	1200	AOR	25	4	8
				20	4	4
	h ≤ 5m	1200	AOR	25	4	4
TC2.5	h ≤ 10m	1200	AOR	25	4	4
	h ≤ 5m	1200	AOR	25	4	4
TC3	h ≤ 10m	1200	AOR	25	4	4
	h ≤ 5m	1200	AOR	25	4	4

TIMBER BATTEN / PURLIN FIXING OPTIONS

Timber Batten / Purlin Fixings – Wind Region C

- **offset** = a maximum distance of 100 mm between the centreline of one of the two inside Bottom Chords of a two collector frame or either of the Bottom Chords of a one collector frame and the centreline of the adjacent rafter / truss and without encroachment within the installation exclusion zone – refer to "Positioning the Frame – Set-Back" on page 6.

- **AOR** = does not have an offset requirement and can be installed anywhere on roof except for encroachment within the installation exclusion zone – refer to "Positioning the Frame – Set-Back" on page 6.

- Refer to diagram Bottom Chord to Base Plate Connection Positions on page 49 for acceptable positions of front and rear Base Plates.

- Batten to be fixed with strapping and or fixing screws to the rafter / truss, in accordance with table 9.25 of AS 1684.3-2010 Residential timber-framed construction Part 3: Cyclonic Areas (Incorporating Amendment No. 1). Minimum uplift capacity required for batten connection is 13 kN.

- Timber battens to be:

  - F17 timber 38 x 75 mm J4 or JD5 joint group or laminated veneer lumber 35 x 75 mm LVL13, or

  - F17 timber 50 x 75 mm J4 or JD5 joint group or laminated veneer lumber 46 x 75 mm LVL13.

  Refer to Detail – Screw into Timber Batten and Detail – Bolt into Timber Batten on page 25.

- Fasteners may be either Tek screws or M8 / 5/16" bolts, washers and nuts.

  Refer to the section "Fasteners and Requirements" commencing on page 21 for the specification of the Tek screws and bolts.

- Minimum embedment of Tek screw into timber batten is 35 mm for J4, JD5 hardwood timber and LVL13 laminated veneer lumber.

- Refer to the following tables for the number of fasteners required per Base Plate and for limitations.

- The timber batten / purlin fixing options for Wind Region C can also be used for Wind Regions A and B.

- Refer to "Dimensional Drawings" commencing on page 45 for the available angles of inclination.

THERMOSIPHON SINGLE COLLECTOR VARIABLE-PITCH FRAME
Wind Region C – 50 x 75 F17 J4 / JD5 or 46 x 75 mm LVL13 Timber Batten Fixing Options

terrain category	max average height	max rafter and truss spacing	off-set or anywhere on roof (AOR) position	max frame angle single collector	minimum fasteners per front base plate	minimum fasteners per rear base plate
TC2	h ≤ 10m	1200	offset	25	4	4
			AOR	20	4	4
		1100	AOR	25	4	4
	h ≤ 5m	1200	offset	25	4	4
			AOR	22.5	4	4
		1100	AOR	25	4	4
TC2.5	h ≤ 10m	1200	offset	25	4	4
			AOR	22.5	4	4
		1100	AOR	25	4	4
	h ≤ 5m	1200	AOR	25	4	4
TC3	h ≤ 10m	1200	AOR	25	4	4
	h ≤ 5m	1200	AOR	25	4	4

THERMOSIPHON SINGLE COLLECTOR VARIABLE-PITCH FRAME
Wind Region C – 38 x 75 F17 J4 / JD5 or 35 x 75 mm LVL13 Timber Batten Fixing Options

terrain category	max average height	max rafter and truss spacing	off-set or anywhere on roof (AOR) position	max frame angle single collector	minimum fasteners per front base plate	minimum fasteners per rear base plate
TC2	h ≤ 10m	1000	offset	25	4	4
		700	AOR	17.5 only	4	4
		600	AOR	25	4	4
	h ≤ 5m	1000	offset	25	4	4
		700	AOR	17.5 to 22.5 only	4	4
		600	AOR	25	4	4
TC2.5	h ≤ 10m	1000	offset	25	4	4
		700	AOR	17.5 to 22.5 only	4	4
		600	AOR	25	4	4
	h ≤ 5m	1000	offset	25	4	4
		700	AOR	17.5 to 22.5 only	4	4
		600	AOR	25	4	4
TC3	h ≤ 10m	1000	offset	25	4	4
		700	AOR	17.5 to 25 only	4	4
		600	AOR	25	4	4
	h ≤ 5m	1000	offset	25	4	4
		700	AOR	17.5 to 25 only	4	4
		600	AOR	25	4	4

THERMOSIPHON DOUBLE COLLECTOR VARIABLE-PITCH FRAME **Wind Region C – 50 x 75 F17 J4 / JD5 or 46 x 75 mm LVL13 Timber Batten Fixing Options**						
terrain category	max average height	max rafter and truss spacing	off-set or anywhere on roof (AOR) position	max frame angle double collector	minimum fasteners per front base plate	minimum fasteners per rear base plate
TC2	h ≤ 10m	1100	AOR	20	8	8
		1000	AOR	22.5	8	8
		900	AOR	25	8	8
	h ≤ 5m	1100	AOR	22.5	8	8
		1000	AOR	25	8	8
TC2.5	h ≤ 10m	1100	AOR	22.5	8	8
		1000	AOR	25	8	8
	h ≤ 5m	1100	AOR	25	8	8
TC3	h ≤ 10m	1100	AOR	25	8	8
	h ≤ 5m	1100	AOR	25	8	8

THERMOSIPHON DOUBLE COLLECTOR VARIABLE-PITCH FRAME **Wind Region C – 38 x 75 F17 J4 / JD5 or 35 x 75 mm LVL13 Timber Batten Fixing Options**						
terrain category	max average height	max rafter and truss spacing	off-set or anywhere on roof (AOR) position	max frame angle double collector	minimum fasteners per front base plate	minimum fasteners per rear base plate
TC2	h ≤ 10m	800	offset	20	8	8
			AOR	17.5	8	8
		700	AOR	25	8	8
	h ≤ 5m	800	offset	22.5	8	8
			AOR	20	8	8
		700	AOR	25	8	8
TC2.5	h ≤ 10m	800	offset	22.5	8	8
			AOR	20	8	8
		700	AOR	25	8	8
	h ≤ 5m	800	offset	22.5	8	8
			AOR	20	8	8
		700	AOR	25	8	8
TC3	h ≤ 10m	800	offset	25	8	8
			AOR	22.5	8	8
		700	AOR	25	8	8
	h ≤ 5m	800	offset	25	8	8
			AOR	22.5	8	8
		700	AOR	25	8	8

2.0M² SINGLE COLLECTOR VARIABLE-PITCH FRAME
Wind Region C – 50 x 75 F17 J4 / JD5 or 46 x 75 mm LVL13 Timber Batten Fixing Options

terrain category	max average height	max rafter and truss spacing	off-set or anywhere on roof (AOR) position	max frame angle single collector	minimum fasteners per front base plate	minimum fasteners per rear base plate
TC2	h ≤ 10m	1200	offset	30	4	4
			AOR	25	4	4
		1100	AOR	30	4	4
	h ≤ 5m	1200	AOR	30	4	4
TC2.5	h ≤ 10m	1200	AOR	30	4	4
	h ≤ 5m	1200	AOR	30	4	4
TC3	h ≤ 10m	1200	AOR	30	4	4
	h ≤ 5m	1200	AOR	30	4	4

2.0M² SINGLE COLLECTOR VARIABLE-PITCH FRAME
Wind Region C – 38 x 75 F17 J4 / JD5 or 35 x 75 mm LVL13 Timber Batten Fixing Options

terrain category	max average height	max rafter and truss spacing	off-set or anywhere on roof (AOR) position	max frame angle single collector	minimum fasteners per front base plate	minimum fasteners per rear base plate
TC2	h ≤ 10m	1000	offset	30	4	4
		800	AOR	25	4	4
		700	AOR	30	4	4
	h ≤ 5m	1100	offset	22.5	4	4
		1000	offset	30	4	4
			AOR	20	4	4
		900	AOR	25	4	4
		800	AOR	30	4	4
TC2.5	h ≤ 10m	1100	offset	22.5	4	4
		1000	offset	30	4	4
			AOR	20	4	4
		900	AOR	25	4	4
		800	AOR	30	4	4
	h ≤ 5m	1100	offset	25	4	4
			AOR	20	4	4
		1000	offset	30	4	4
			AOR	25	4	4
		900	AOR	30	4	4
TC3	h ≤ 10m	1200	offset	22.5	4	4
		1100	offset	30	4	4
			AOR	22.5	4	4
		1000	AOR	30	4	4
	h ≤ 5m	1200	offset	22.5	4	4
		1100	offset	30	4	4
			AOR	22.5	4	4
		1000	AOR	30	4	4

2.0M² DOUBLE COLLECTOR VARIABLE-PITCH FRAME
Wind Region C – 50 x 75 F17 J4 / JD5 or 46 x 75 mm LVL13 Timber Batten Fixing Options

terrain category	max average height	max rafter and truss spacing	off-set or anywhere on roof (AOR) position	max frame angle double collector	minimum fasteners per front base plate	minimum fasteners per rear base plate
TC2	h ≤ 10m	1100	AOR	22.5	8	8
		1000	AOR	30	8	8
	h ≤ 5m	1200	AOR	25	8	8
		1100	AOR	30	8	8
TC2.5	h ≤ 10m	1200	AOR	25	8	8
		1100	AOR	30	8	8
	h ≤ 5m	1200	offset	30	8	8
			AOR	25	8	8
		1100	AOR	30	8	8
TC3	h ≤ 10m	1200	AOR	30	8	8
	h ≤ 5m	1200	AOR	30	8	8

2.0M² DOUBLE COLLECTOR VARIABLE-PITCH FRAME
Wind Region C – 38 x 75 F17 J4 / JD5 or 35 x 75 mm LVL13 Timber Batten Fixing Options

terrain category	max average height	max rafter and truss spacing	off-set or anywhere on roof (AOR) position	max frame angle double collector	minimum fasteners per front base plate	minimum fasteners per rear base plate
TC2	h ≤ 10m	800	AOR	22.5	8	8
		700	AOR	30	8	8
	h ≤ 5m	900	AOR	22.5	8	8
		800	AOR	30	8	8
TC2.5	h ≤ 10m	900	AOR	22.5	8	8
		800	AOR	30	8	8
	h ≤ 5m	900	AOR	25	8	8
		800	AOR	30	8	8
TC3	h ≤ 10m	1000	AOR	22.5	8	8
		900	AOR	30	8	8
	h ≤ 5m	1000	AOR	22.5	8	8
		900	AOR	30	8	8

2.6M² SINGLE COLLECTOR VARIABLE-PITCH FRAME
Wind Region C – 50 x 75 F17 J4 / JD5 or 46 x 75 mm LVL13 Timber Batten Fixing Options

terrain category	max average height	max rafter and truss spacing	off-set or anywhere on roof (AOR) position	max frame angle single collector	minimum fasteners per front base plate	minimum fasteners per rear base plate
TC2	h ≤ 10m	1200	offset	17.5	4	4
			AOR	15	4	4
		1100	offset	25	4	8 (4)
			AOR	20	4	8 (4)
				17.5	4	4
		1000	AOR	22.5	4	8 (4)
		900	AOR	25	4	8 (4)
	h ≤ 5m	1200	offset	25	4	8 (4)
			AOR	22.5	4	4
		1100	AOR	25	4	8 (4)
TC2.5	h ≤ 10m	1200	offset	25	4	8 (4)
				22.5	4	4
			AOR	20	4	4
		1100	AOR	25	4	8 (4)
				22.5	4	4
	h ≤ 5m	1200	AOR	25	4	4
TC3	h ≤ 10m	1200	AOR	25	4	4
	h ≤ 5m	1200	AOR	25	4	4

2.6M² SINGLE COLLECTOR VARIABLE-PITCH FRAME
Wind Region C – 38 x 75 F17 J4 / JD5 or 35 x 75 mm LVL13 Timber Batten Fixing Options

terrain category	max average height	max rafter and truss spacing	off-set or anywhere on roof (AOR) position	max frame angle single collector	minimum fasteners per front base plate	minimum fasteners per rear base plate
TC2	h ≤ 10m	1000	offset	17.5	4	4
		800	AOR	15	4	4
		700	AOR	20	4	8 (4)
				17.5	4	4
		600	AOR	25	4	8 (4)
	h ≤ 5m	1000	offset	25	4	8 (4)
				22.5	4	4
		900	AOR	15	4	4
		800	AOR	20	4	4
		700	AOR	25	4	8 (4)
				22.5	4	4
TC2.5	h ≤ 10m	1000	offset	25	4	8 (4)
				22.5	4	4
		900	AOR	15	4	4
		800	AOR	20	4	4
		700	AOR	25	4	8 (4)
				22.5	4	4
	h ≤ 5m	1100	offset	15	4	4
		1000	offset	25	4	4
			AOR	15	4	4
		900	AOR	17.5	4	4
		800	AOR	22.5	4	4
		700	AOR	25	4	4
TC3	h ≤ 10m	1100	offset	20	4	4
		1000	offset	25	4	4
			AOR	17.5	4	4
		900	AOR	22.5	4	4
		800	AOR	25	4	4
	h ≤ 5m	1100	offset	20	4	4
		1000	offset	25	4	4
			AOR	17.5	4	4
		900	AOR	22.5	4	4
		800	AOR	25	4	4

The minimum 8 x Teks screws can be replaced by 4 x M8 / 5/16” bolts, washers and nuts.
Figure in brackets is the number of screw fixings required for J3/JD4 or LVL13 timber

FASTENERS AND REQUIREMENTS

Positioning of Fasteners

- The Base Plates should be positioned so the fastener holes line up with the higher points of the roof profile.
- An equal number of fasteners are to be positioned on either side of each Bottom Chord.
- Where 4 fasteners per Base Plate (one collector frame) or 8 fasteners per Base Plate (two collector frame) are required to be installed, they are to be positioned at either both ’A’ positions only, or both ‘B’ positions only on either side of a Bottom Chord.
- Where 8 fasteners per Base Plate (one collector frame) or 16 fasteners per Base Plate (two collector frame) are required to be installed, they are to be positioned at both ’A’ positions and both ‘B’ positions on either side of each Bottom Chord.
- The distance between fasteners installed at ‘B’ positions on either side of the Bottom Chord is not to exceed 320 mm.

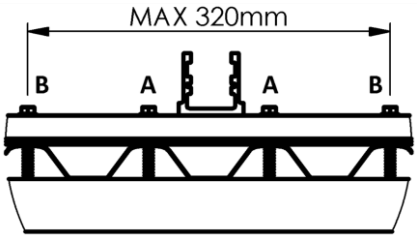

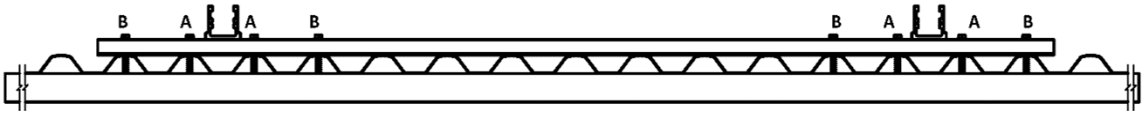

Typical A and B fastener positions – 1 collector frame

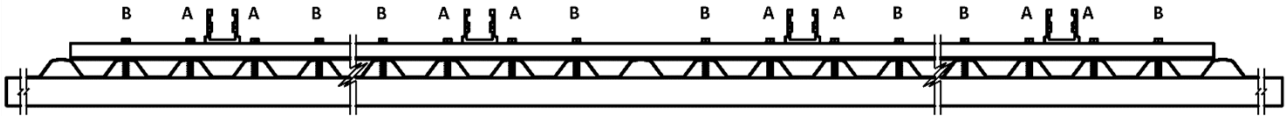

Typical A and B fastener positions – 2 collector frame

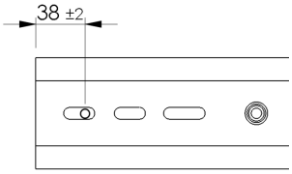

Typical first fastener (B) position
through Base Section (except as otherwise shown)

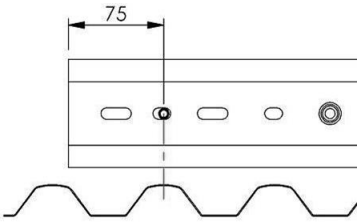

First fastener position (B) in two collector Base Section
onto Square Corrugate Pitch – 87.5 mm

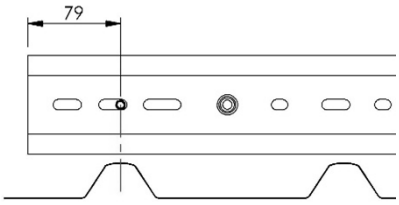

First fastener position in one collector Base Section
onto Square Corrugate Pitch – 190.5 mm

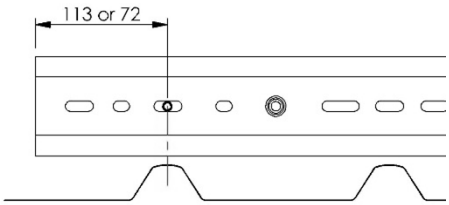

First fastener position in two collector Base Section
onto Square Corrugate Pitch – 190.5 mm

Typical first fastener positions

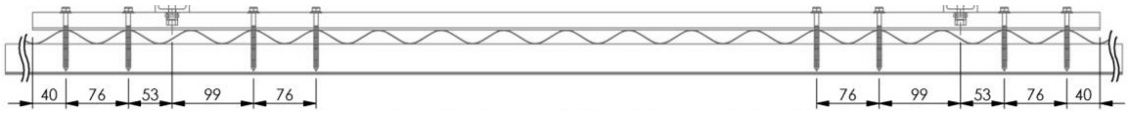

ROUND CORRUGATED FORM METAL ROOF CLADDING (76.2mm RIDGE CENTRES) – SHOWING FASTENER POSITIONS A & B

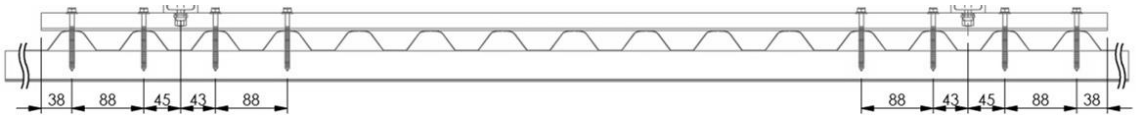

SQUARE CORRUGATED FORM METAL ROOF CLADDING (87.5mm RIDGE CENTRES) – SHOWING FASTENER POSITIONS A & B

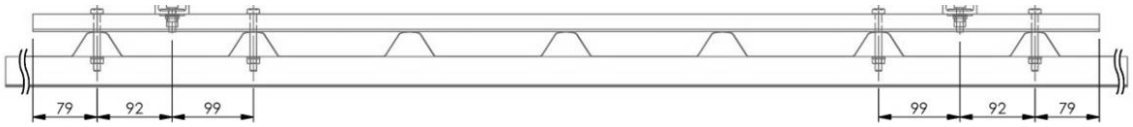

SQUARE CORRUGATED FORM METAL ROOF CLADDING (190.5mm RIDGE CENTRES) – SHOWING FASTENER POSITIONS A

Diagram – Examples of typical fastener fixing locations – one collector frames

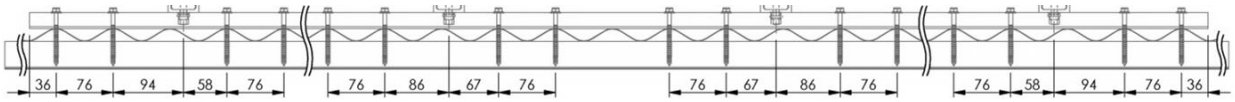

ROUND CORRUGATED FORM METAL ROOF CLADDING (87.5mm RIDGE CENTRES) – SHOWING FASTENER POSITIONS A & B

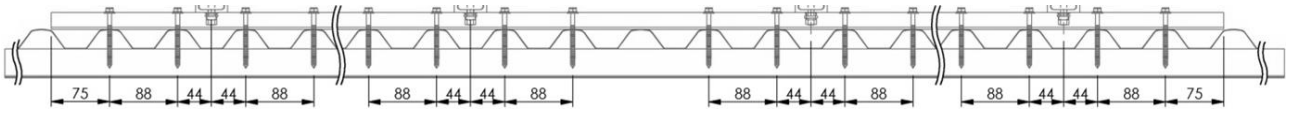

SQUARE CORRUGATED FORM METAL ROOF CLADDING (87.5mm RIDGE CENTRES) – SHOWING FASTENER POSITIONS A & B

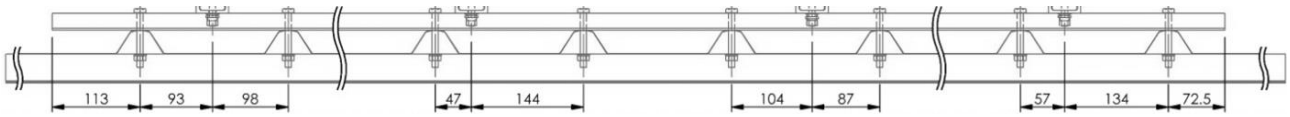

SQUARE CORRUGATED FORM METAL ROOF CLADDING (190.5mm RIDGE CENTRES) — SHOWING FASTENER POSITIONS A
(OFFSET CAN BE LEFT OR RIGHT)

Diagram – Examples of typical fastener fixing locations – two collector frames

Metal Screw Fixing Requirements – Steel Top Hat Batten / Purlin
Refer to "Steel Batten / Purlin Fixing Options" on page 9 to ensure the metal screw fastener is suitable for the batten type and terrain category. Refer also to "Positioning of Fasteners" page 21 for positioning requirements of the fasteners from either side of the Bottom Chords.

- The metal screw shall be a minimum 14G self-drilling class 4 metal screw, and compatible with the roof material. A M6.5-12 x 70 mm Hex Head Cyclonic with EPDM Seal RoofZip (Buildex® No. 6-030-3401-1C4) is a suitable fastener. It has a 70 mm nominal and 59.5 mm effective length.
- A metal screw is only suitable for use through cladding with a profile height not exceeding 30 mm. This will provide the 70 mm RoofZip with a minimum 12 mm protrusion of the steel batten.
- The maximum compressed thickness of any thermal bridging tape or insulating blanket between the underside of the cladding and battens or purlins is to be no greater than 6 mm.
- If fixing at a rafter and through the SHS with a RoofZip, pre-drill a Ø5.0 mm hole down through the SHS.
- Refer to Detail – Metal Screw into Top Hat Batten on page 24.

Metal Teks Screw Fixing Requirements – Steel Batten / Purlin
Refer to "Steel Batten / Purlin Fixing Options" on page 9 to ensure the metal Teks screw fastener is suitable for the batten type and terrain category. Refer also to "Positioning of Fasteners" page 21 for positioning requirements of the fasteners from either side of the Bottom Chords.

- The metal Teks screw shall be a minimum 14G-10TPI stainless steel or equivalent hot dip galvanised, and compatible with the roof material.
- A metal Teks screw is only suitable for use through cladding with a profile height not exceeding 30 mm.
- The maximum compressed thickness of any thermal bridging tape or insulating blanket between the underside of the cladding and battens or purlins is to be no greater than 6 mm.
- Refer to Detail – Teks Screw into Steel SHS Batten on page 25.

Tek Screw Fixing Requirements – Timber Batten / Purlin
Refer to "Timber Batten / Purlin Fixing Options" on page 15 to ensure the Tek screw fastener is suitable for the batten type and terrain category. Refer also to "Positioning of Fasteners" page 21 for positioning requirements of the fasteners from either side of the Bottom Chords.

- Tek screws No. 14g-10 TPI Hex Washer Type 17 are to be galvanised, class 4, and compatible with the roof material.
- A Tek screw is only suitable for use through cladding with a profile height not exceeding 30 mm.
- Refer to the table "Timber Batten / Purlin Fixing Options" on page 15 for the minimum embedment requirements into a J4 / JD5 timber or LVL13 laminated veneer lumber batten / purlin.
- Refer to Detail – Screw into Timber Batten on page 25.

Bolt Fixing Requirements – Steel or Timber Batten / Purlin
Refer to "Steel Batten / Purlin Fixing Options" on page 9 and to "Timber Batten / Purlin Fixing Options" on page 15 to ensure the M8 or 5/16" UNC or BSW Hex bolt fastener is suitable for the batten type and terrain category. Refer also to "Positioning of Fasteners" page 21 for positioning requirements of the fasteners from either side of the Bottom Chords.

- The M8 or 5/16" UNC or BSW Hex bolt with 2 flat washers of 16 mm OD and minimum thickness 1.6 mm, one under the bold head and the other under the nut, are to be of stainless steel (A2-70 minimum) or hot dip galvanized (GR 4.6 minimum), and compatible with the roof material.
- An M8 or 5/16" UNC or BSW Hex bolt is only suitable for use through cladding with a profile height not exceeding 30 mm.
- The length of each bolt must enable a minimum 13 mm penetration past the underside of the batten or purlin material for the nut and washer.
- Pre-drill each hole though the EPDM foam tape using a Ø6.5 mm – Ø7.5 mm drill bit.
- Refer to Detail – Bolt into Top Hat Batten on page 24 and Detail – Bolt into Steel SHS Batten on page 25.

Fastener Connection Details

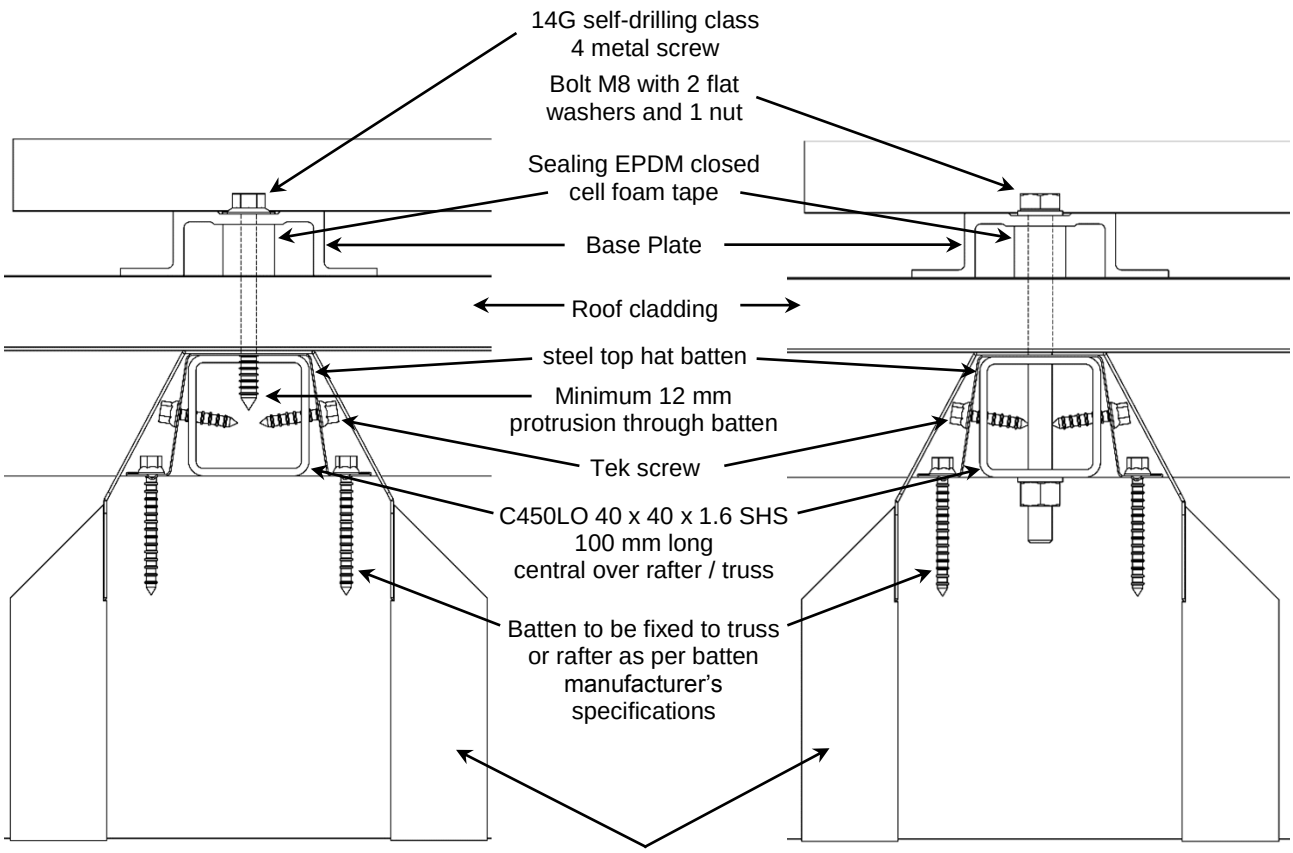

Roof batten to be fixed with strapping and or fixing screws to the rafter / truss, in accordance with table 9.25 of AS 1684.3-2010 Residential timber-framed construction Part 3: Cyclonic Areas (Incorporating Amendment No. 1). Minimum uplift capacity required for batten connection is 13 kN.

Detail – Metal Screw into Top Hat Batten with 100 mm length SHS at rafter

Detail – Bolt into Top Hat Batten with 100 mm length SHS at rafter

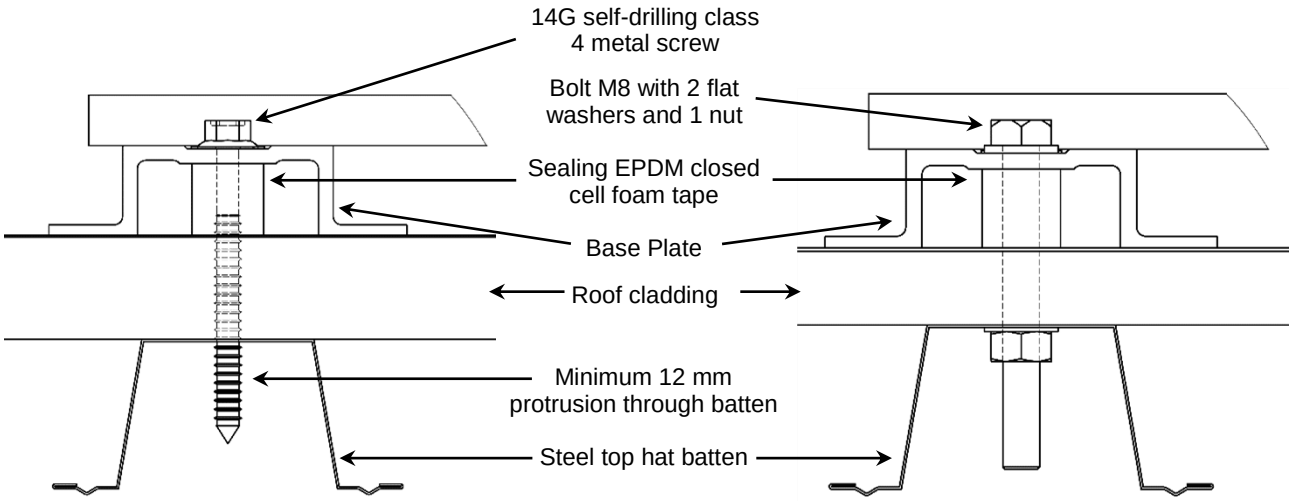

Detail – Metal Screw into Top Hat Batten mid-span of rafters

Detail – Bolt into Top Hat Batten mid-span of rafters

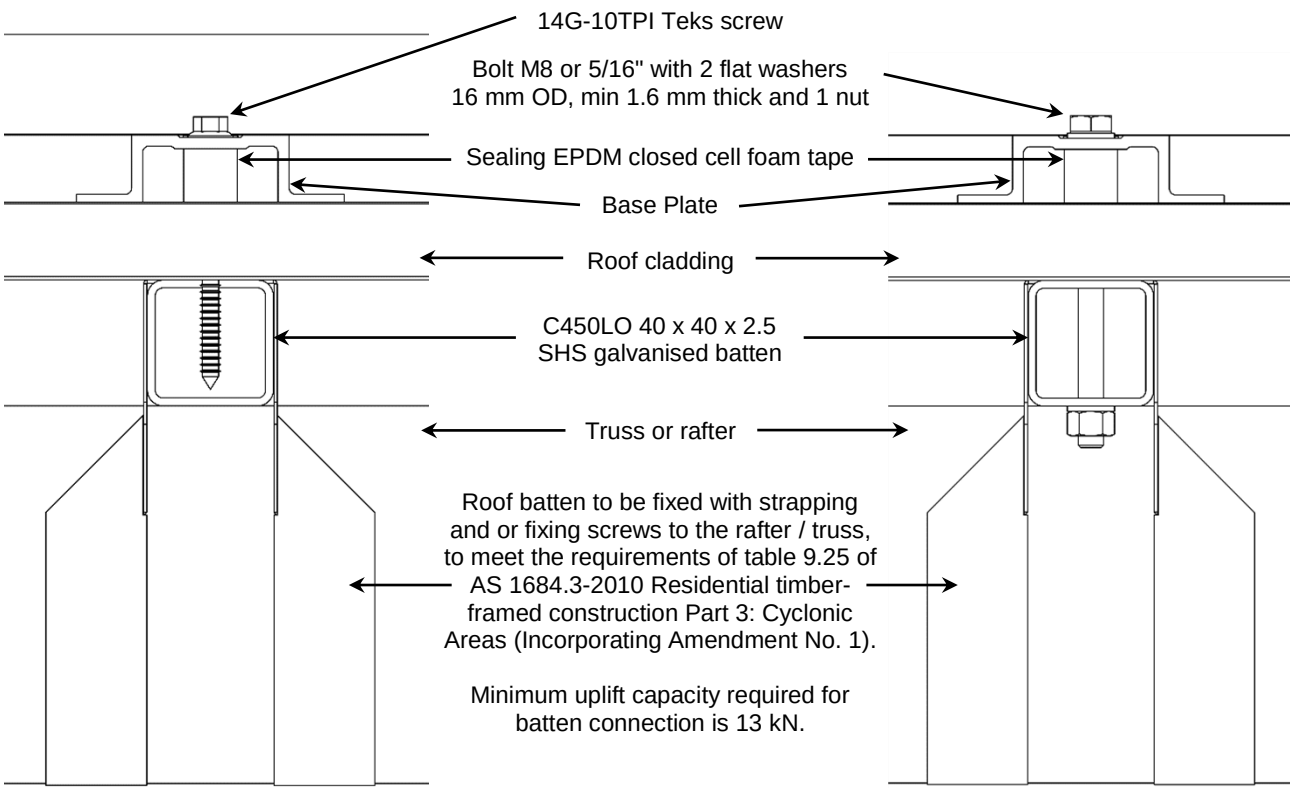

Detail – Teks Screw into Steel SHS Batten **Detail – Bolt into Steel SHS Batten**

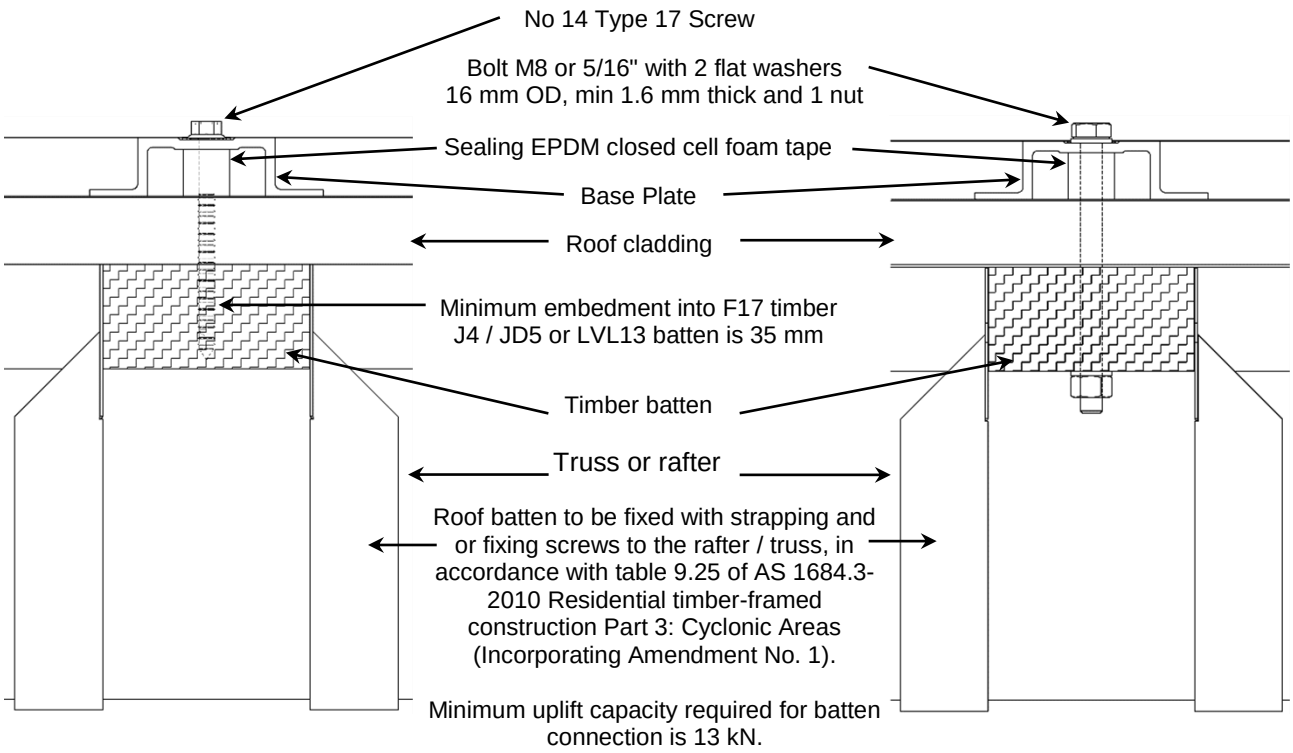

Detail – Screw into Timber Batten **Detail – Bolt into Timber Batten**

TERRAIN CATEGORY

The terrain category for a housing site is a measure of the lowest effective surface roughness from any radial direction within a distance of 500 m of the proposed housing site. The terrain category for a housing site is identified by the notation TC1, TC1.5, TC2, TC2.5 or TC3.

The terrain category is taken to include what type of development will occur over the next five years. For example, if a new housing estate is created in what was open land (TC2 or TC2.5), then the first homes built can be treated as being part of a built-up suburban housing area (TC3), although at the time of their construction they are in a TC2 or TC2.5 situation.

Substantial well established trees may be considered as obstructions for evaluation of terrain category in all wind regions.

Terrain Categories are defined as:

Terrain Category 1 (TC1): Very exposed open terrain with few or no obstructions and enclosed limited sized water surfaces at serviceability and ultimate wind speeds in all wind regions, e.g. flat, treeless, poorly grassed plains, or river, canals, lakes and enclosed bays, extending less than 10 km in the wind direction.

Terrain Category 1.5 (TC1.5): Open water surfaces subjected to shoaling waves at serviceability and ultimate wind speeds in all wind regions, e.g. near-shore water, large unenclosed bays on seas and oceans, lakes and enclosed bays extending greater than 10 km in the wind direction.

Terrain Category 2 (TC2): Open terrain including grassland with well-scattered obstructions having heights generally from 1.5 m to 5 m with no more than two obstructions per hectare, e.g. farmland and cleared subdivisions with isolated trees and uncut grass.

Terrain Category 2.5 (TC2.5): Terrain with a few trees or isolated obstructions. This category is intermediate between TC2 and TC3 and represents the terrain in developing outer urban areas with scattered houses, or large acreage developments with fewer than 10 buildings per hectare.

Terrain Category 3 (TC3): Terrain with numerous closely spaced obstructions having heights generally from 3 m to 10 m. The minimum density of obstructions shall be at least the equivalent of 10 house-size obstructions per hectare, e.g. suburban housing or light industrial estates.

Terrain Category 4 (TC4): Terrain with numerous large, high (10 m to 30 m tall) and closely-spaced constructions, such as large city centres and well-developed industrial complexes.

In urban situations, roads, rivers, small lakes or canals less than 200 m wide are considered to form part of normal ‘Terrain Category 3’ terrain. Parks and other open spaces less than 250,000 m^2 in area are also considered to form part of normal ‘Terrain Category 3’ terrain provided they are not within 500 m of each other, or not within 500 m of open country.

Housing sites less than 200 m from the boundaries of open areas larger than 250,000 m^2, e.g. golf courses, that are completely surrounded by urban terrain, are considered to have the terrain category applicable to the open area itself. Shielding provisions may still apply to these sites.

Housing sites less than 500 m from the edge of a development shall be classified as the applicable terrain that adjoins the development, i.e. TC1, TC1.5, TC2, TC2.5 or TC3, as applicable.

For information on the terrain category of a particular site, contact your local council.

SOLAR WATER HEATER SYSTEMS

The Variable-Pitch frame system is suitable for installation with the thermosiphon solar water heaters and collector only installations listed, including rebranded systems using the same tank designs. The tables list the kits and the quantities required for each thermosiphon solar water heater or collector only installation.

Thermosiphon One and Two Collector Systems

		Kits supplied for frame system				
	Sales BOM ordered	**1210 7002**	**1210 7003**	**1210 7008**	**1210 3998**	**1210 3999**
Rheem Thermosiphon Systems – VE Tank						
52C180, 52S160 tank – one collector	1 x 204021	1	-	1	-	-
52C300, 52S300 tank – two collectors	1 x 204022	-	1	2	-	-
Rheem Thermosiphon Systems – SS Tank						
52H180, 52L180 tank – one collector	1 x 204023	1	-	1	1	-
52H300, 52L300 tank – two collectors	1 x 204024	-	1	2	-	1
Solahart Thermosiphon Systems – VE Tank						
150J, 150L tank – one collector 180J, 180L tank – one collector	1 x 204021	1	-	1	-	-
220J, 220L tank – two collectors 300F, 300J, 300L, 300LF tank – two collectors	1 x 204022	-	1	2	-	-

Note: SS = stainless steel VE = vitreous enamel lined

The frame systems and the kits required are:

- **204021** **Frame Variable-Pitch 1 Collector 2.0m^2 Thermosiphon VE Cat C**, consisting of
  1 x 12107008 Kit Variable-Pitch A-Frame Thermo 15-25Deg
  1 x 12107002 Kit With-Pitch Frame Base 1 Collector Thermo

- **204022** **Frame Variable-Pitch 2 Collector 2.0m^2 Thermosiphon VE Cat C**, consisting o**f**
  2 x 12107008 Kit Variable-Pitch A-Frame Thermo 15-25Deg
  1 x 12107003 Kit With-Pitch Frame Base 2 Collector Thermo

- **204023** **Frame Variable-Pitch 1 Collector 2.0m^2 Thermosiphon SS Cat C**, consisting of
  1 x 12107008 Kit Variable-Pitch A-Frame Thermo 15-25Deg
  1 x 12107002 Kit With-Pitch Frame Base 1 Collector Thermo
  1 x 12103998 Kit Frame Mounting 180 SS Tank

- **204024** **Frame Variable-Pitch 2 Collector 2.0m^2 Thermosiphon SS Cat C**, consisting of
  2 x 12107008 Kit Variable-Pitch A-Frame Thermo 15-25Deg
  1 x 12107003 Kit With-Pitch Frame Base 2 Collector Thermo
  1 x 12103999 Kit Frame Mounting 300 SS Tank

Collector Only One and Two Collector Systems

		Kits supplied for frame system			
	Sales BOM ordered	**1210 7004**	**1210 7005**	**1210 7008**	**1210 7009**
Collector Only 2.0 m² – 20-30°					
2.0 m² collector only 20-30° – one collector	1 x 204025	1	-	-	1
2.0 m² collector only 20-30° – two collector	1 x 204026	-	1	-	2
Collector Only 2.6 m² – 15-25°					
2.6 m² collector only 15-25° – one collector	1 x 204027	1	-	1	-

The frame systems and the kits required are:

- **204025** **Frame Variable-Pitch 1 Collector 2.0m² 20-30° Cat C**, consisting of
  1 x 12107009 Kit Variable-Pitch A-Frame Coll Only 20-30Deg
  1 x 12107004 Kit With-Pitch Frame Base 1 Collector Thermo

- **204026** **Frame Variable-Pitch 2 Collector 2.0m² 20-30° Cat C**, consisting of
  2 x 12107009 Kit Variable-Pitch A-Frame Coll Only 20-30Deg
  1 x 12107005 Kit With-Pitch Frame Base 2 Collector Only

- **204027** **Frame Variable-Pitch 1 Collector 2.6m² 15-25° Cat C**, consisting of
  1 x 12107008 Kit Variable-Pitch A-Frame Thermo 15-25Deg
  1 x 12107004 Kit With-Pitch Frame Base 1 Collector Thermo

PARTS SUPPLIED

The kits that make up the Variable-Pitch frame system contain the parts required, including Tank Clamps, Collector Clamps, screws, washers and nuts, for assembling the frame and attaching the solar storage tank and solar collectors to the frame.

The Tank Clamps, Collector Clamps, screws, washers and nuts supplied with the kits must be used with these frames. They replace the equivalent components that may be supplied in the parts kit or pipe kit supplied with the solar water heater, which must not be used with these frames.

Refer to "List of Components" on page 29.

Notes

- The kits do not include the fasteners for fixing the frame to the roof.
- Not all of the parts supplied will be used in the installation:
  - The Tank Clamps, Collector Clamps and some fixings used will depend upon the type of storage tank and solar collector(s) installed.

    Refer to "Assembly Diagrams" on page 32.
  - The plastic bag marked 204234 or 204235 contains spare components of set screws, nuts and washers. These are supplied to cover the loss of components on site.

TANK FRAME MOUNTING KIT

The Rheem 52H and 52L solar stainless steel tanks require a tank frame mounting kit to be assembled to the flat base of these tanks, when the installation is in Wind Region C. When assembled onto the tank, the reinforcement provides additional strength to the foot of the tank (refer to the diagram "Solar Storage Tank with Flat Base and Reinforcement Plate / Angle" on page 31).

The kit part numbers are:

- 12103998 Tank Frame Mounting Kit 52H180, 52L180
- 12103999 Tank Frame Mounting Kit 52H300, 52L300

LIST OF COMPONENTS

The contents of the Frame Base kits for the thermosiphon frames and collector only frames are:

Component Part No	Frame Base Kit Contents Component Description	12107002 1 Collector Thermo Frame Base Kit	12107003 2 Collector Thermo Frame Base Kit	12107004 1 Collector Coll Only Frame Base Kit	12107005 2 Collector Coll Only Frame Base Kit
204222	Base plate sub-assembly aluminium 1 collector system	2	-	2	-
204223	Base plate sub-assembly aluminium 2 collector system	-	2	-	2
204435	Collector Rail Envelope / FT 1 collector frame	1	-	2	-
204436	Collector Rail Envelope / FT 2 collector frame	-	1	-	2
204407	Tank / Collector Rail Envelope / FT 1 collector frame	1	-	-	-
204408	Tank / Collector Rail Envelope / FT 2 collector frame	-	1	-	-
	Contents of polyethylene bags (used for assembly)	3	3	2	2
209113	Set screw Hex M8 x 50 mm SS 304	6	12	-	-
209114	Set screw Hex M8 x 30 mm (G304)	8	16	12	24
209118	Nut M8 x 1.25 mm (G304)	10	20	8	16
209122	Washer rectangular 65 x 32 x 8 mm – aluminium	10	20	8	16
209124	Washer flat 8 mm (G304)	10	20	8	16
209125	Washer spring 8 x 14.3 x 2 mm (G304)	14	28	12	24
204424	Clamp Envelope collector – Collector Rail	2	4	4	8
204428	Clamp folded-tray collector – tank rail	2	4	-	-
204431	Clamp folded-tray collector – Collector Rail	2	4	4	8
080071	Screw Tek 14 G x 20 TPI x 22	2	4	-	-
344121	Tank Clamp aluminium assy	2	2	-	-
204660	Tank Clamp galvanised	2	4	-	-
	Contents of polyethylene bag (spare components)	**204235**	**204235**	**204234**	**204234**
209113	Set screw Hex M8 x 50 mm SS 304	2	2	-	-
209114	Set screw Hex M8 x 30 mm (G304)	2	2	2	2
209118	Nut M8 x 1.25 mm (G304)	2	2	2	2
209124	Washer flat 8 mm (G304)	2	2	2	2
209125	Washer spring 8 x 14.3 x 2 mm (G304)	2	2	2	2

Notes

The following components supplied in kits 12107002, 12107003, 12107004, 12107005 are not required to be used in the installation of the Variable-Pitch frames and can be discarded:

- 209122 Washer rectangular 65 x 32 x 8 mm – aluminium

The contents of the A-frame kits are:

Component Part No	Kit Variable-Pitch A-Frame kits Component Description	Kit 12107008 Thermo A-frame	Kit 12107009 Collector A-frame
204440	Channel top chord 2495mm M8 nutsert	2	-
204442	Channel top chord 2050mm M8 nutsert	-	2
204441	Channel bottom chord 2100mm	2	2
204450	Leg internal 28 x 500 mm	2	-
204451	Leg internal 28 x 625 mm	2	2
204452	Leg external 40 x 500 mm	2	-
204453	Leg external 40 x 625 mm	2	2
204461	Angle Cross Brace 25 x 25 x 3 mm	2	2
344121	Tank Clamp aluminium assy	1	-
207515	Installation instructions – Variable-Pitch frame	1	1
204242	**polyethylene bag – contents below (used for assembly)**	1	-
204243	**polyethylene bag – contents below (used for assembly)**	-	1
209112	Set screw Hex M8 x 60 mm SS 304	19	13
209110	Set screw Hex M8 x 25 mm SS 304	5	5
209103	Nut M8 flanged SS-304	19	13
209124	Washer flat 8 mm (G304)	5	5

The contents of the frame mounting kits for the stainless steel tanks are:

Component Part No	Kit Frame Mounting SS Tanks Component Description	12103998 180 SS Tank Mounting Kit	12103999 300 SS Tank Mounting Kit
343060	Tank strap long cyclone	2	2
343238	Front reinforcement plate 180 SS tank	1	-
343240	Front reinforcement plate 300 SS tank	-	1
343239	Rear reinforcement angle 180 SS tank	1	-
343241	Rear reinforcement angle 300 SS tank	-	1
	Contents of polyethylene bag	1	1
343203	Tank strap rear bracket	2	2
343207	Tank Clamp SS tank – galvanised steel	2	2
080167	Screw Tek 10 G x 16 mm	11	14
348033	Set screw Hex 5/16” UNC x 1 ½” SS	2	2
330806	Nut 5/16” SS	2	2
347667	Installation instructions – SS tank frame mounting	1	1

Note: The kits do not include the fasteners for fixing the frame to the roof.

TANK BASE DESIGNS

References are made in these installation instructions relating to the type of tank base and supporting feet design and how it is fixed to the With-Pitch frame. Each design of tank base and feet has its own unique method of connecting to the frame.

The types of tank base design and supporting feet are:

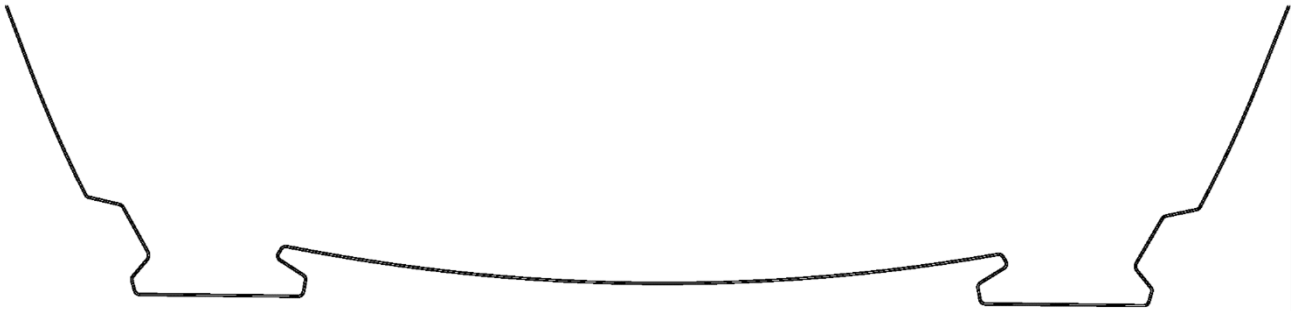

Type 1 – Solar Storage Tank with Two Flat Feet
(Solahart tanks, Rheem Hiline 52C tanks, Sunheat closed circuit 'C' tanks)

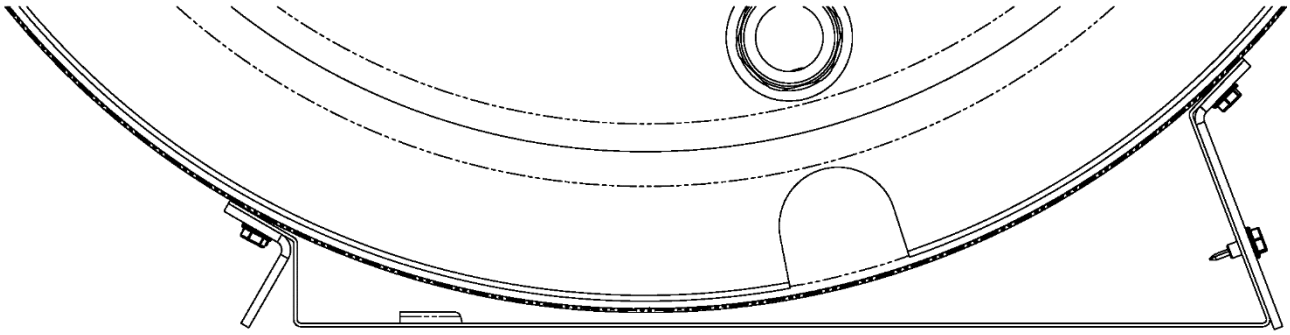

Type 2 – Solar Storage Tank with Flat Base and Reinforcement Plate and Angle
(Rheem 52H and 52L tanks)

Type 3 – Solar Storage Tank with Z-section Feet
(Rheem Hiline 52S tanks and Sunheat direct 'D' tanks)

ASSEMBLY DIAGRAMS

SOLAR STORAGE TANK WITH ONE COLLECTOR – FRAME ASSEMBLY

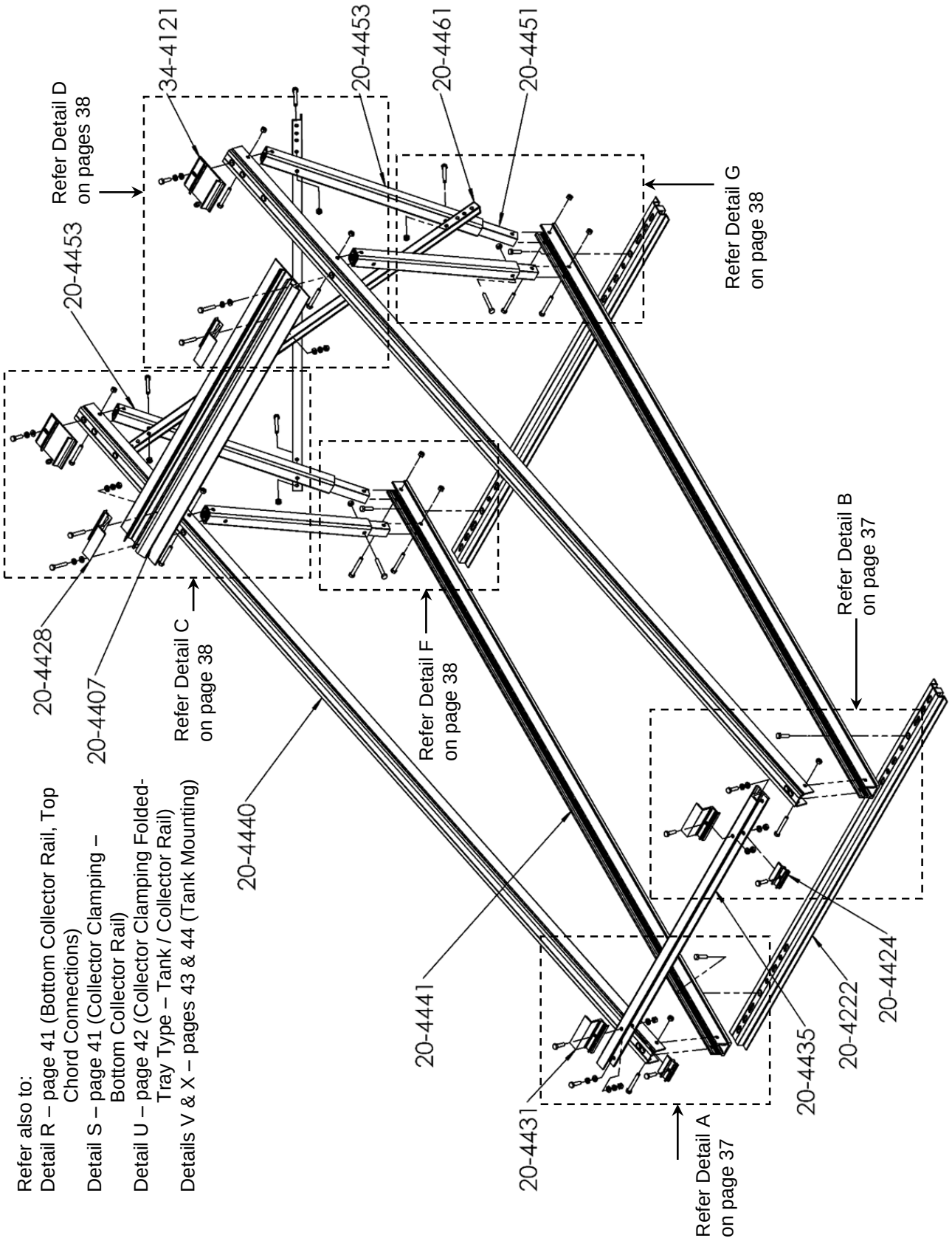

Diagram 1
1 x 204021 – Variable-Pitch Frame Thermosiphon with 1 x 2.0m^2 Collector – 150, 160, 180 Tanks
(assembly drawing shows type 1 tank mounting options)

SOLAR STORAGE TANK WITH TWO COLLECTORS – FRAME ASSEMBLY

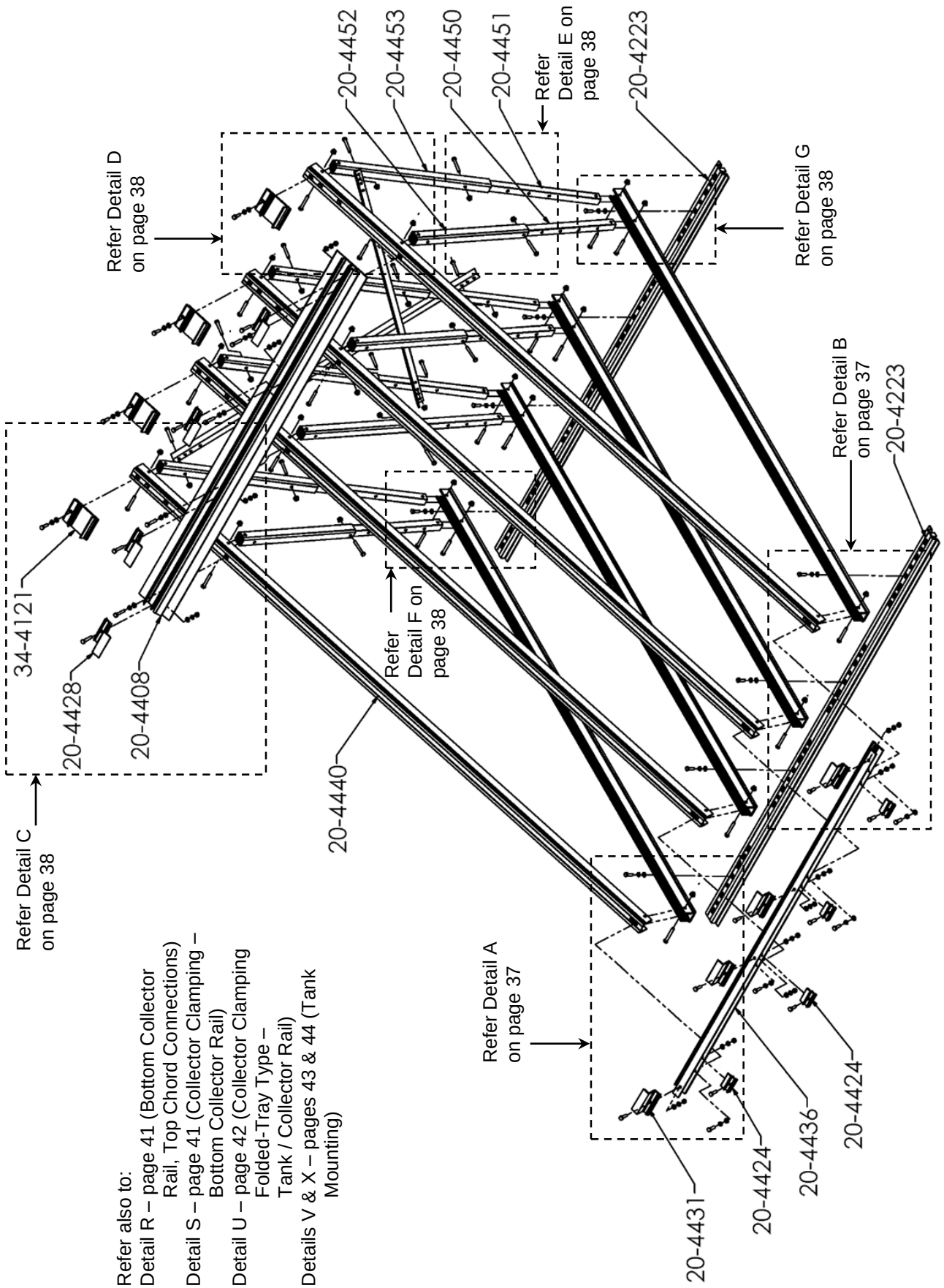

Diagram 2
1 x 204022 – Variable-Pitch Frame Thermosiphon with 2 x 2.0m^2 Collectors – 220, 300 Tanks
(assembly drawing shows type 1 tank mounting options)

COLLECTOR ONLY WITH ONE 2.0M^2 COLLECTOR – FRAME ASSEMBLY

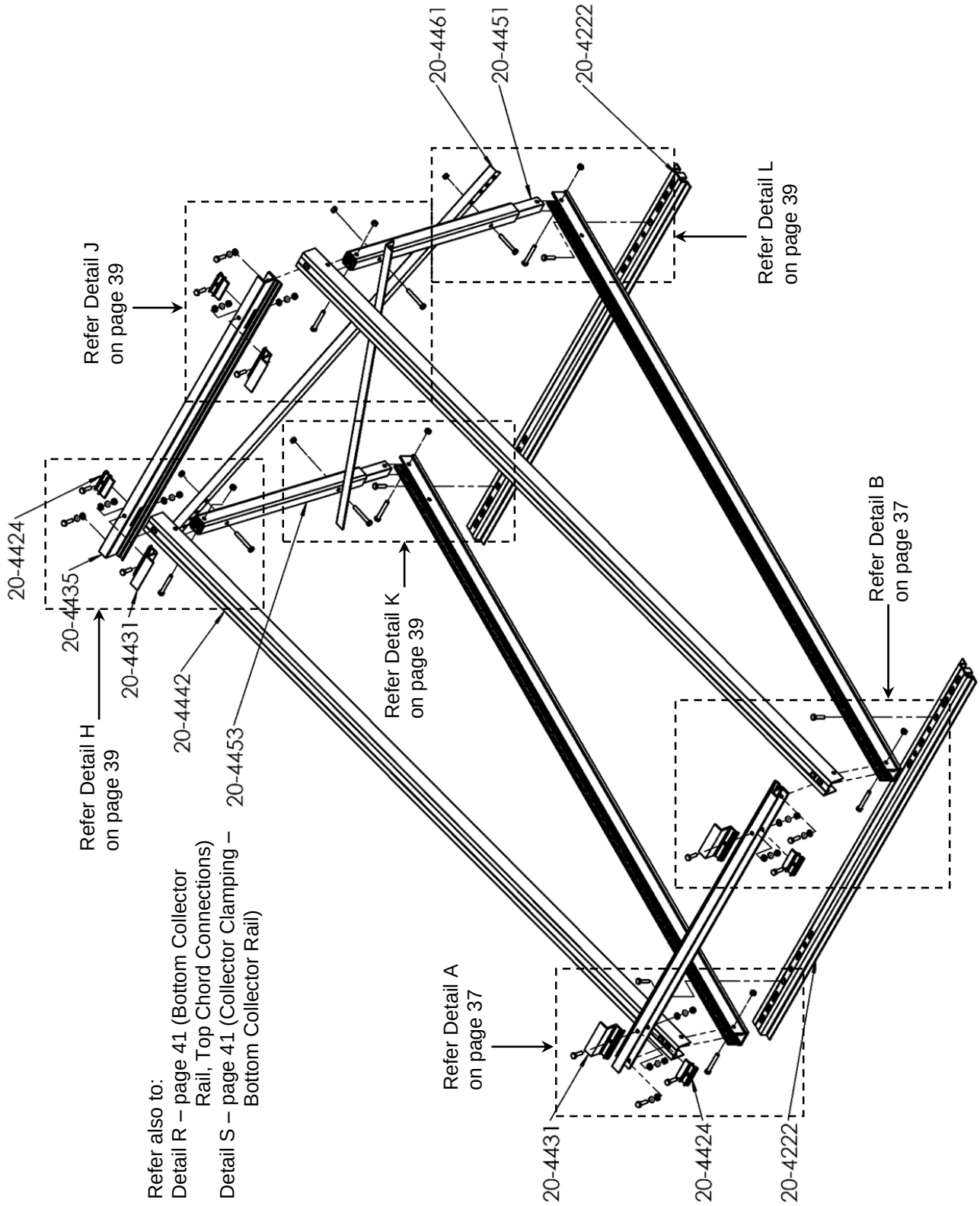

Diagram 3
1 x 204025 – Variable-Pitch Frame Collector Only with 1 x 2.0m^2 Collector – 20°-30°

COLLECTOR ONLY WITH TWO 2.0M^2 COLLECTOR – FRAME ASSEMBLY

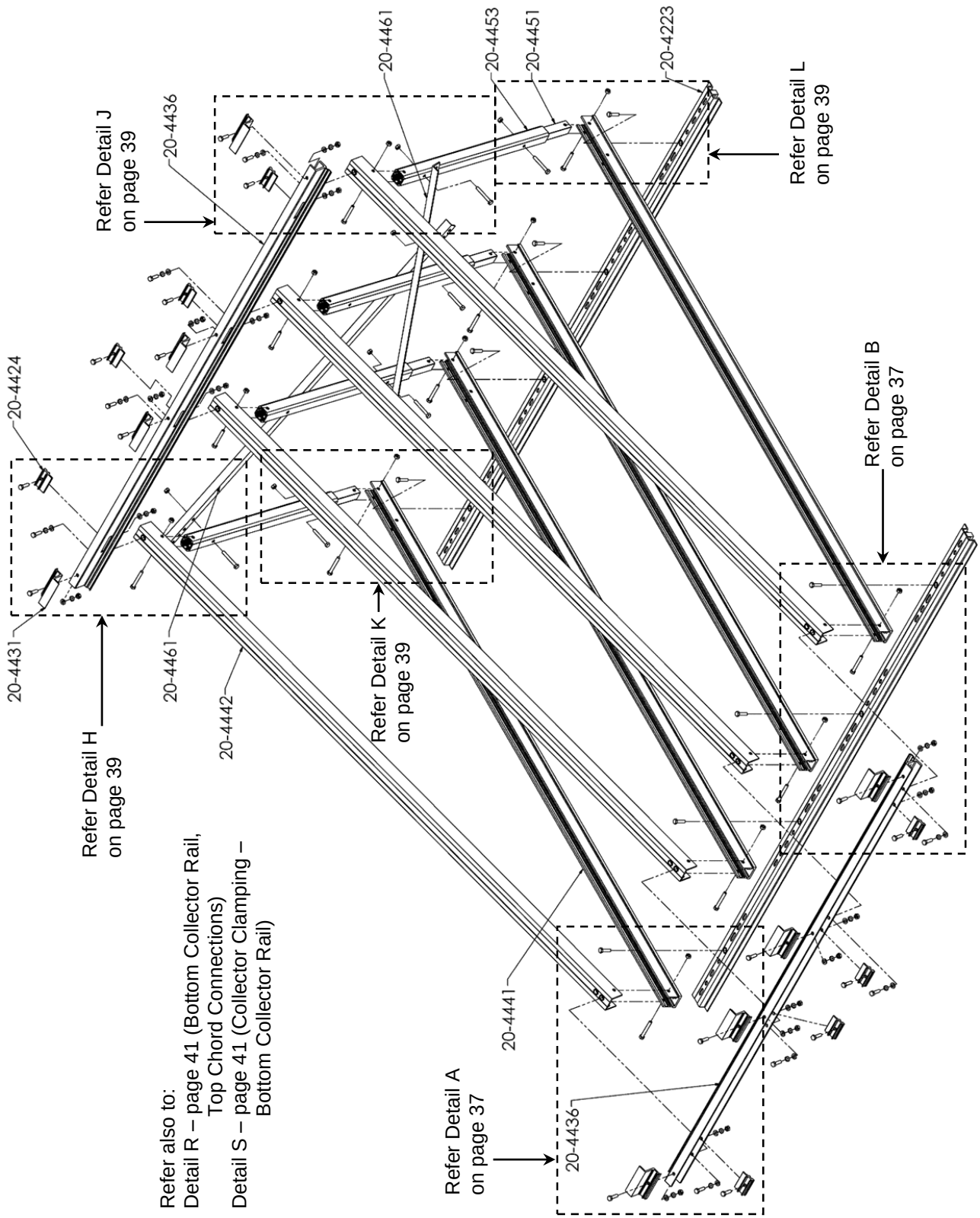

Diagram 4
1 x 204026 – Variable-Pitch Frame Collector Only with 2 x 2.0m^2 Collector – 20°-30°

COLLECTOR ONLY WITH ONE 2.6M² COLLECTOR – FRAME ASSEMBLY

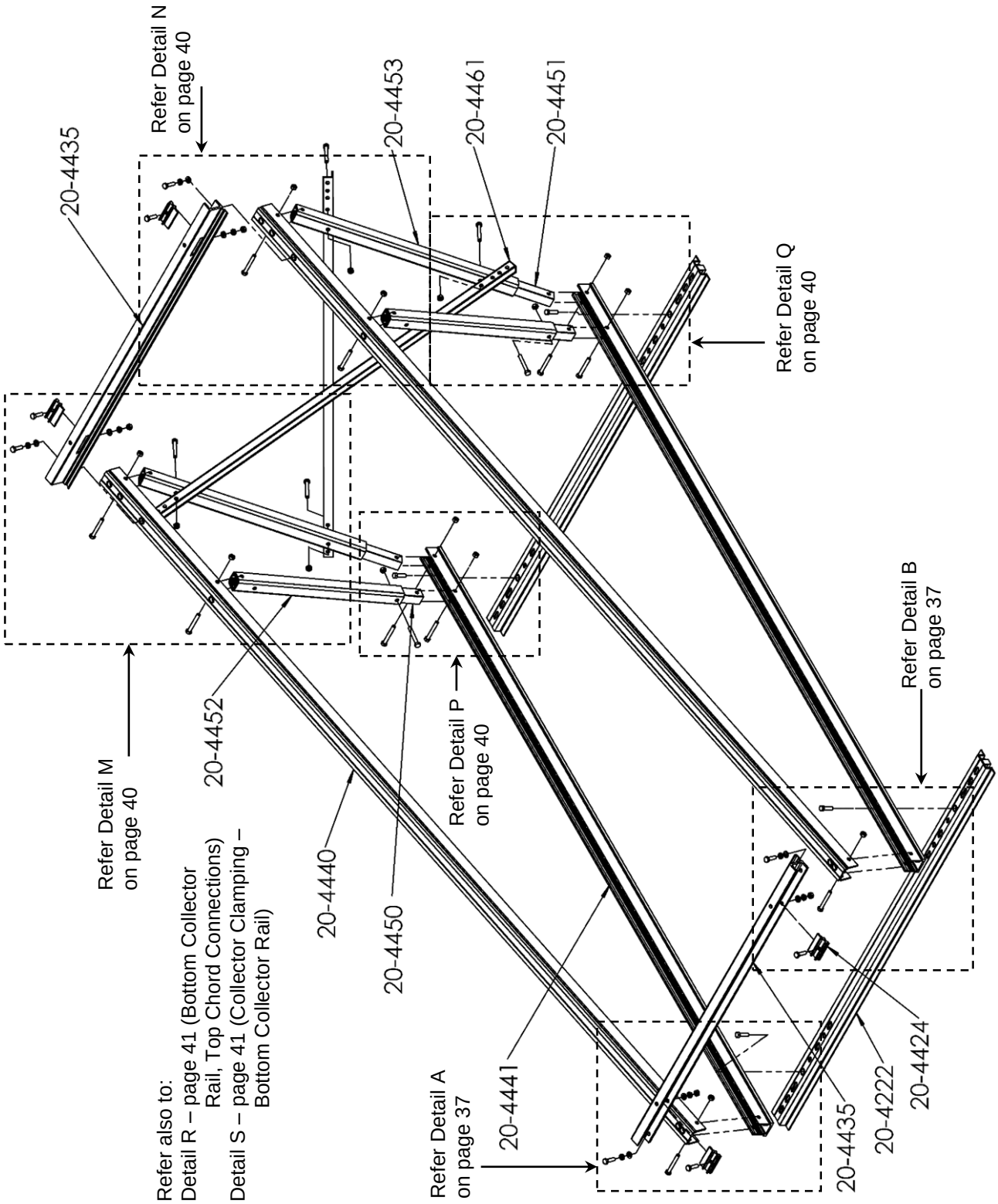

Diagram 5
1 x 204027 – Variable-Pitch Frame Collector Only with 1 x 2.0m² Collector – 15°-25°

ASSEMBLY DETAILS

Common Front Base Plate, Bottom and Top Chord Assemblies

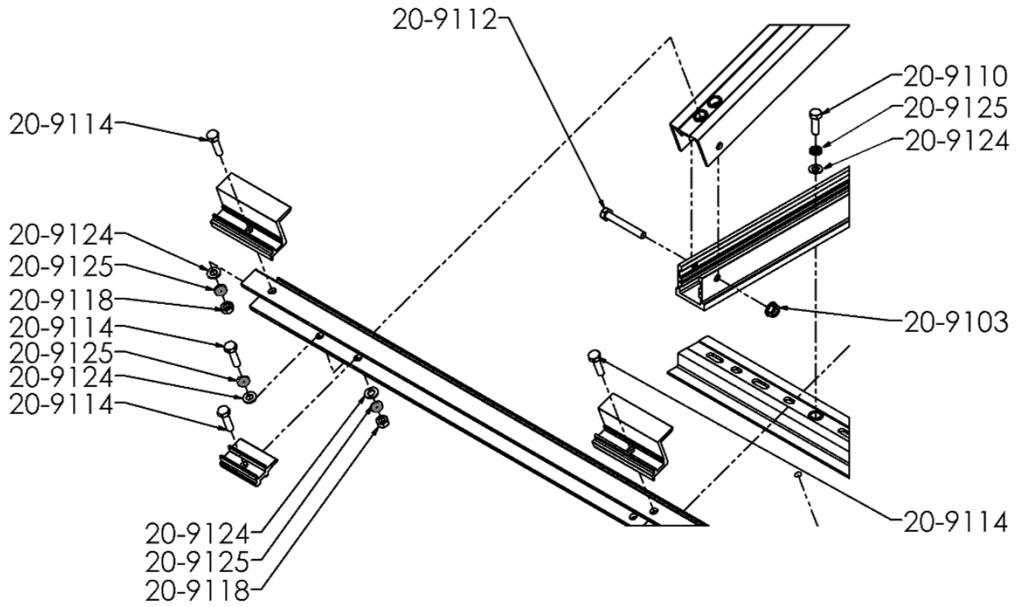

Detail A

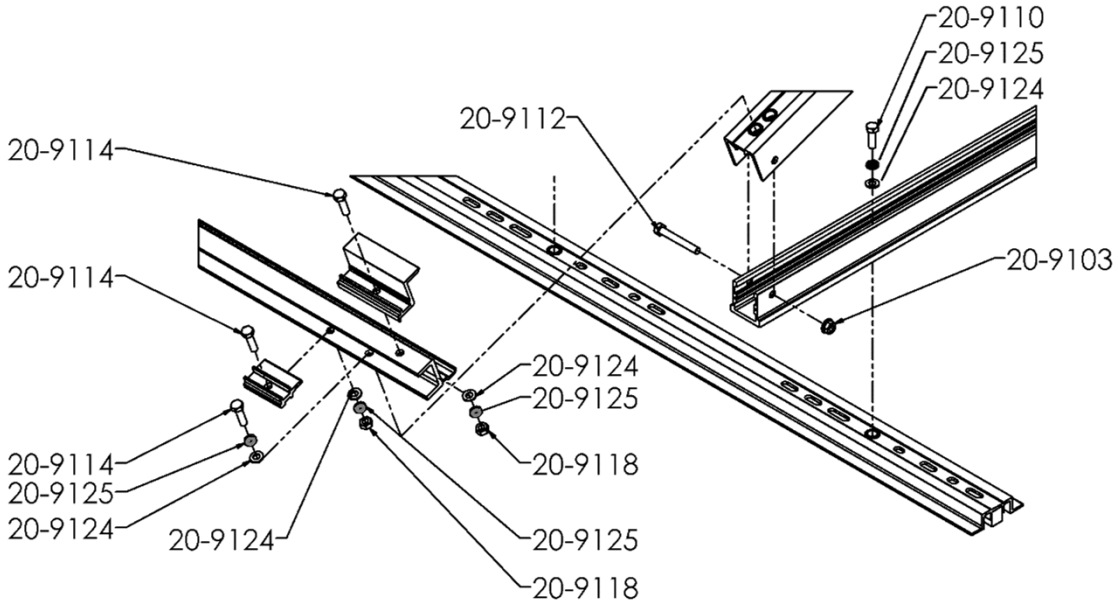

Detail B

20-9103	=	Nut M8 flanged SS (304)
20-9110	=	Set screw Hex M8 x 25 mm (G304)
20-9112	=	Set screw Hex M8 x 60 mm (G304)
20-9114	=	Set screw Hex M8 x 30 mm (G304)
20-9118	=	Nut M8 x 1.25 mm (G304)
20-9124	=	Washer flat 8 mm (G304)
20-9125	=	Washer spring 8 x 14.3 x 2 mm (G304)

Thermosiphon Frame Assembly Details

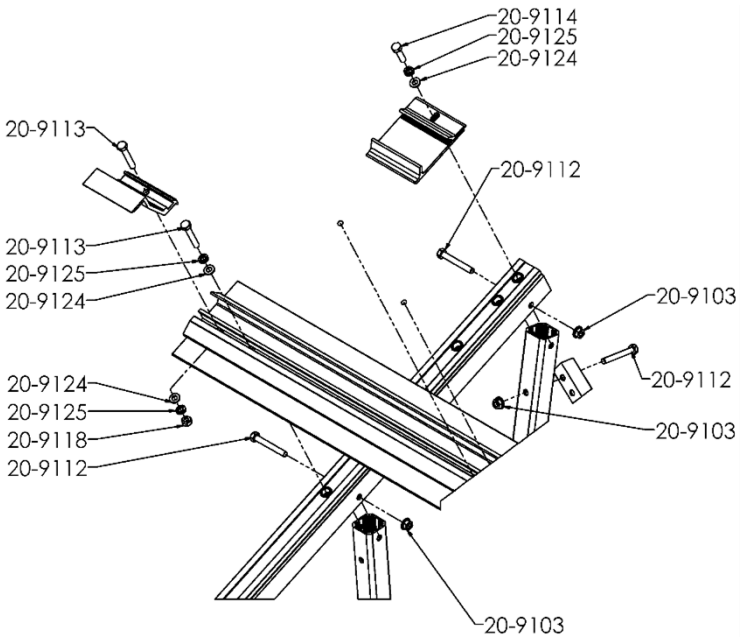

Detail C

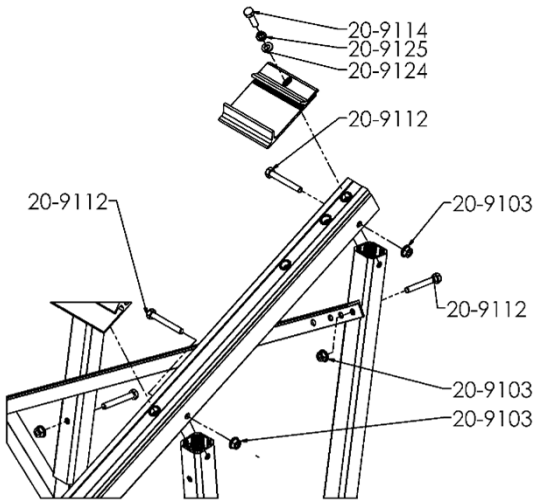

Detail D

20-9103	=	Nut M8 flanged SS (304)
20-9110	=	Set screw Hex M8 x 25 mm (G304)
20-9112	=	Set screw Hex M8 x 60 mm (G304)
20-9113	=	Set screw Hex M8 x 50 mm (G304)
20-9114	=	Set screw Hex M8 x 30 mm (G304)
20-9118	=	Nut M8 x 1.25 mm (G304)
20-9124	=	Washer flat 8 mm (G304)
20-9125	=	Washer spring 8 x 14.3 x 2 mm (G304)

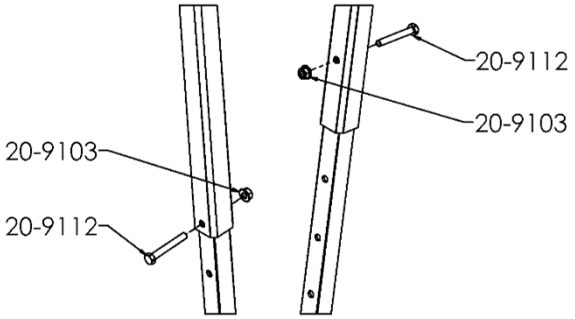

Detail E

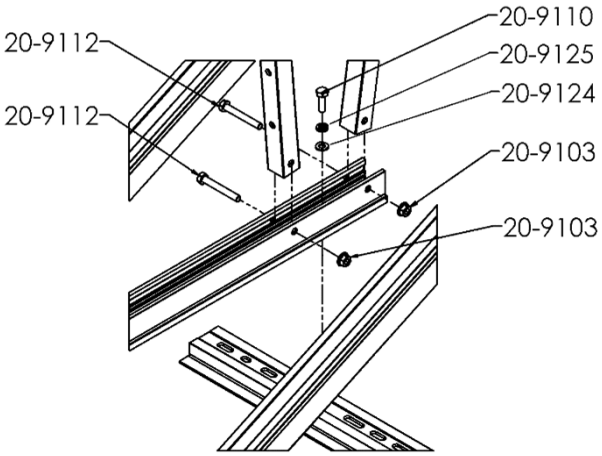

Detail F

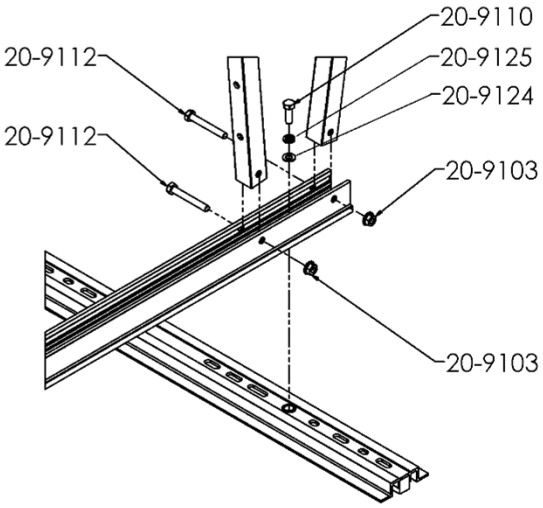

Detail G

Collector Only 2.0m² Collector Frames Assembly Details

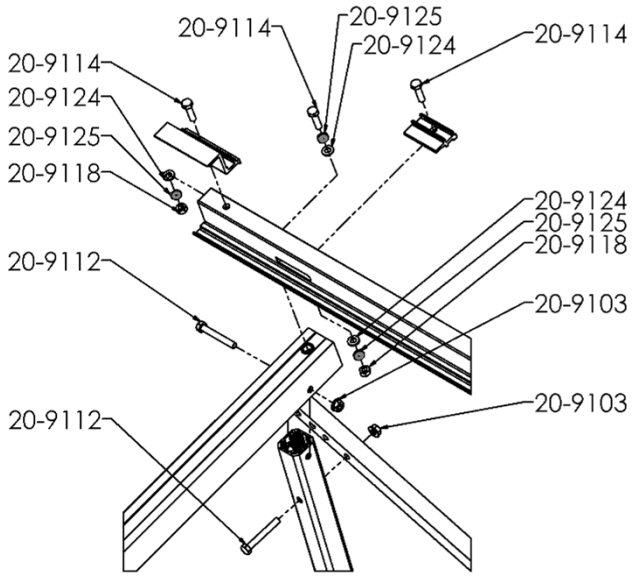

Detail H

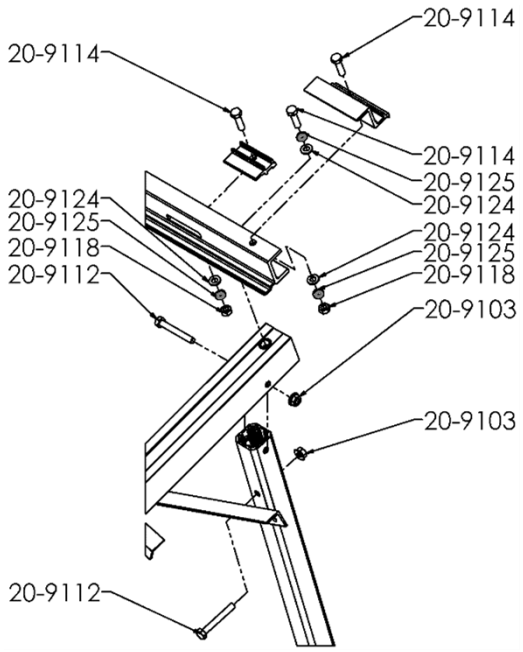

Detail J

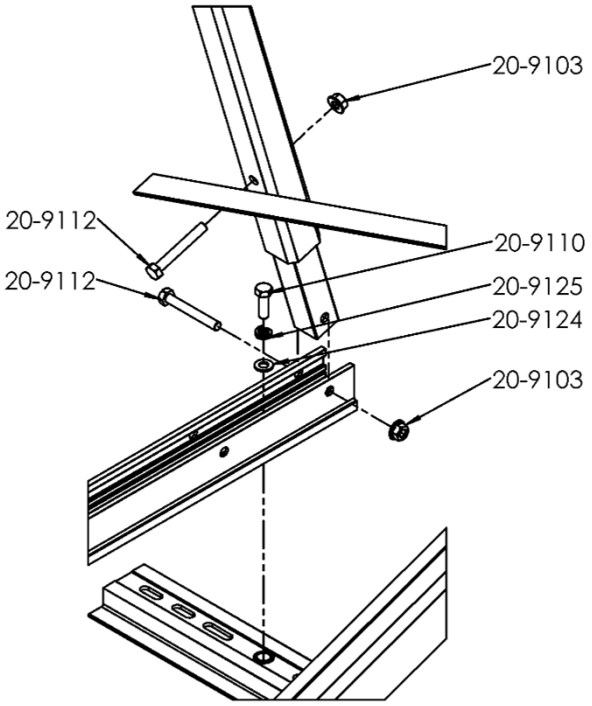

Detail K

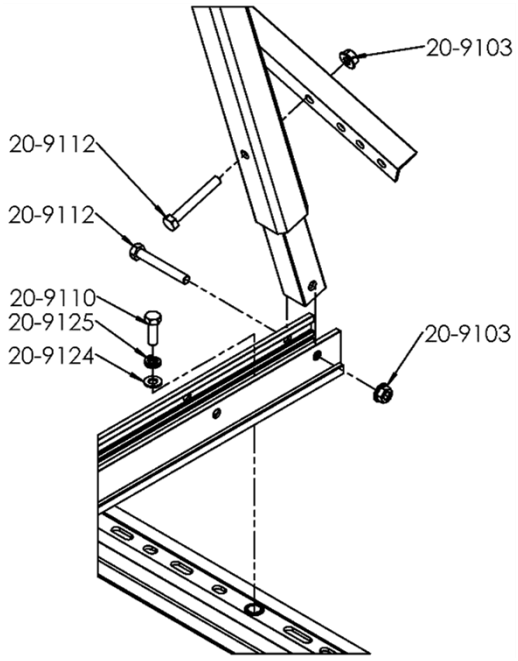

Detail L

20-9103	=	Nut M8 flanged SS (304)
20-9110	=	Set screw Hex M8 x 25 mm (G304)
20-9112	=	Set screw Hex M8 x 60 mm (G304)
20-9114	=	Set screw Hex M8 x 30 mm (G304)
20-9118	=	Nut M8 x 1.25 mm (G304)
20-9124	=	Washer flat 8 mm (G304)
20-9125	=	Washer spring 8 x 14.3 x 2 mm (G304)

Collector Only 2.6m² Collector Frame Assembly Details

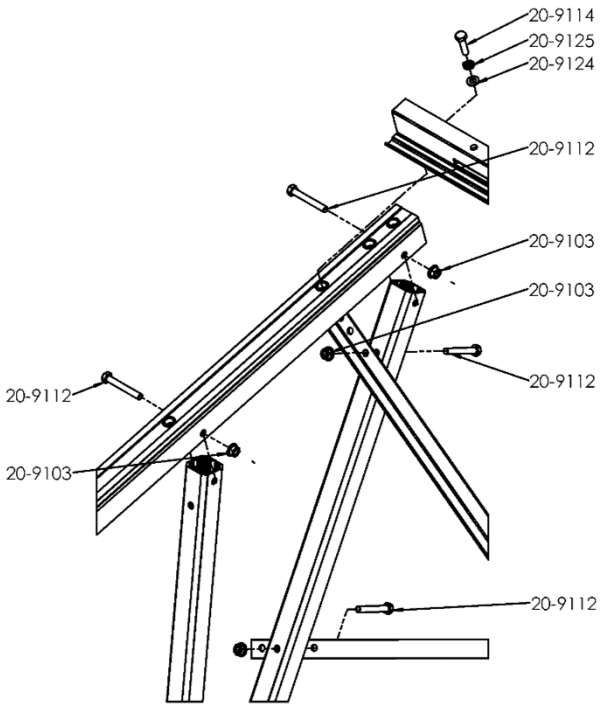

Detail M

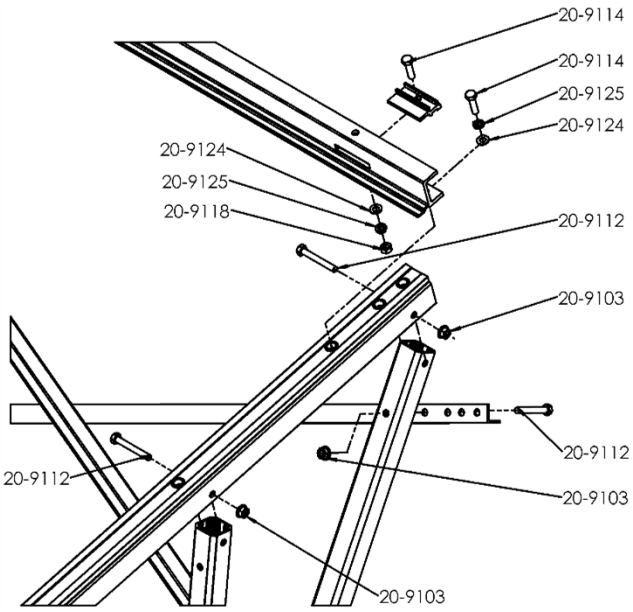

Detail N

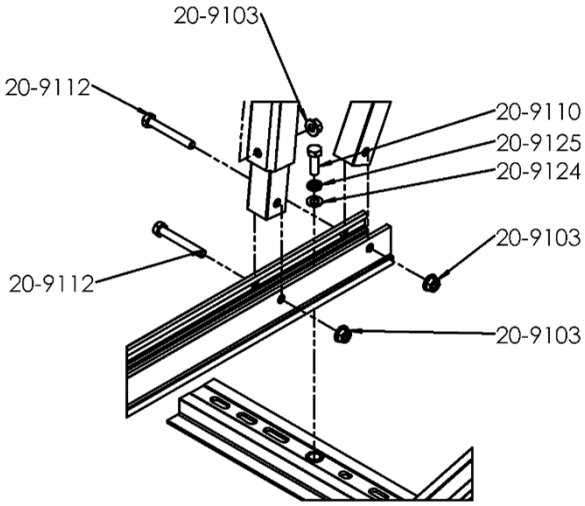

Detail P

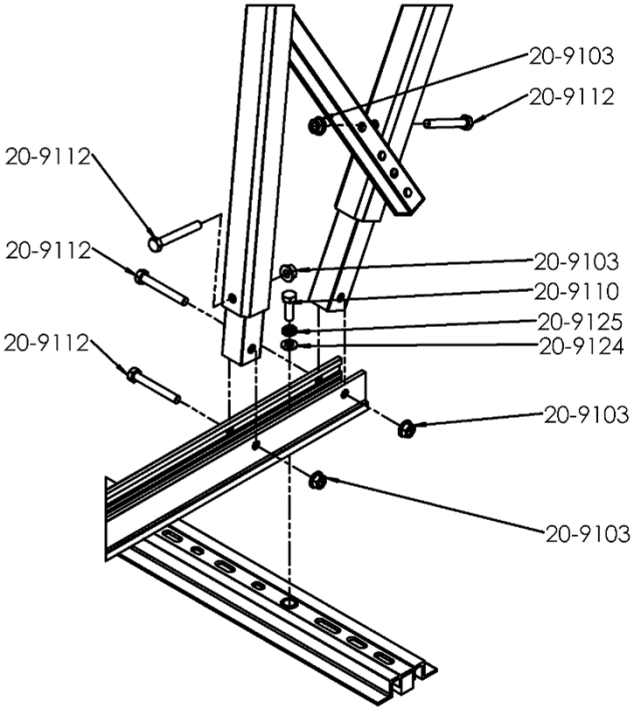

Detail Q

20-9103	=	Nut M8 flanged SS (304)
20-9110	=	Set screw Hex M8 x 25 mm (G304)
20-9112	=	Set screw Hex M8 x 60 mm (G304)
20-9114	=	Set screw Hex M8 x 30 mm (G304)
20-9118	=	Nut M8 x 1.25 mm (G304)
20-9124	=	Washer flat 8 mm (G304)
20-9125	=	Washer spring 8 x 14.3 x 2 mm (G304)

Bottom Collector Rail and Collector Clamping Assemblies

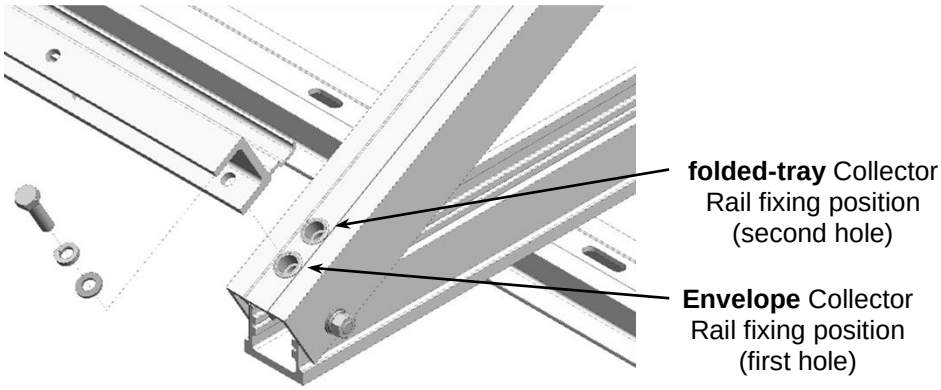

Detail R
Bottom Collector Rail, Top Chord Connections

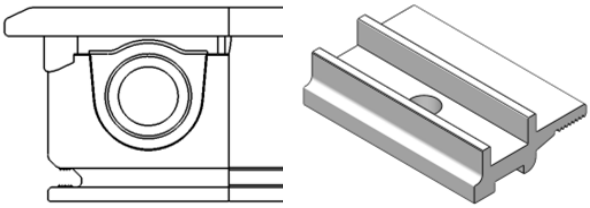

Envelope profile and Collector Clamp – 204424
Collector Rail location

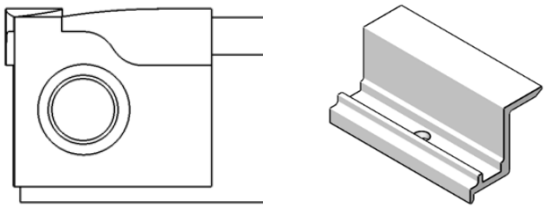

folded-tray profile and Collector Clamp – 204431
Collector Rail location

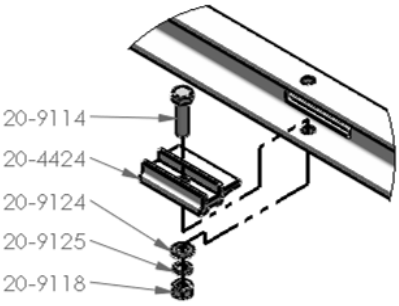

Envelope collector type

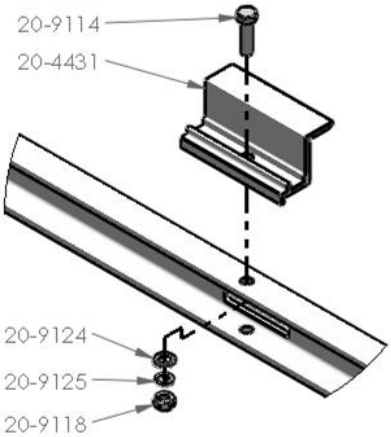

folded-tray collector type

Detail S
Collector Clamping – Bottom Collector Rail
Lower Base Plate Connections – Thermosiphon and Collector Only Frames

Top Collector Rail and Tank / Collector Rail and Collector Clamping Assemblies

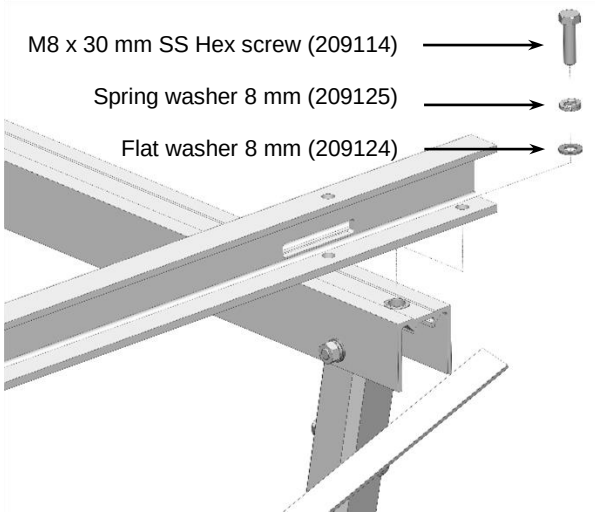

Top Collector Rail, Top Chord, Collector Only Frame

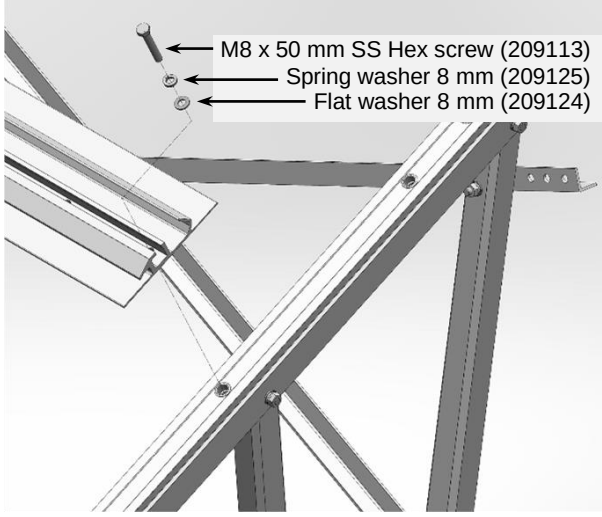

Tank / Collector Rail, Top Chord, Thermosiphon Frame

Detail T
Top Collector Rail, Tank / Collector Rail, Top Chord Connections

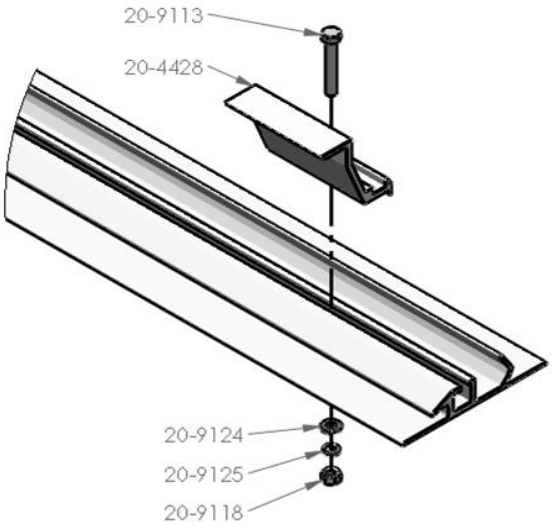

Tank / Collector Rail location

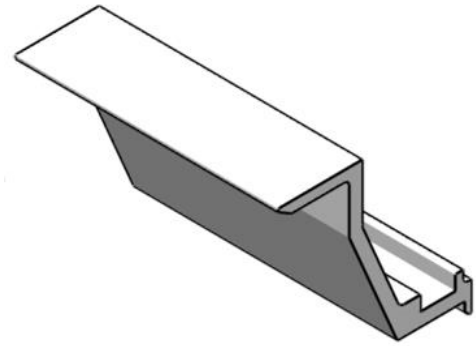

folded-tray Collector Clamp – 204428

Detail U
Collector Clamping Folded-Tray Type – Tank / Collector Rail

Note: For Collector Clamping details on top Collector Rail, refer to Detail S on page 41 for details.

Thermosiphon Tank Clamp Assemblies

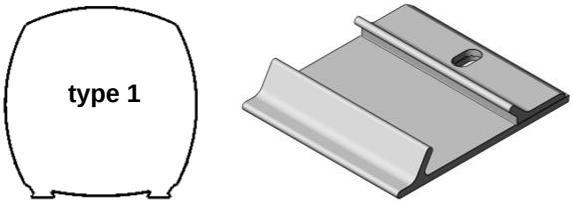

type 1 tank and Tank Clamp – 344121

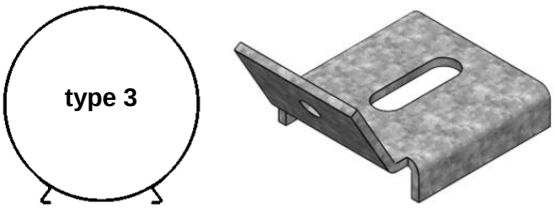

type 3 tank and Tank Clamp – 204660

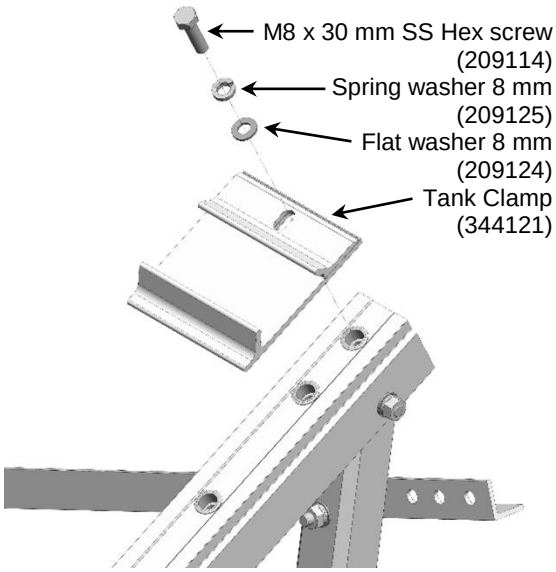

type 1 tank mounting
solar storage tank with two flat feet

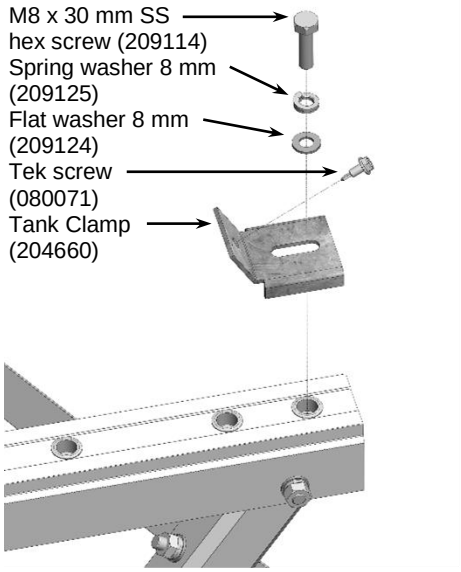

type 3 tank mounting
solar storage tank with Z-section feet

Detail V
Tank Mounting – Type 1 and 3 Tanks

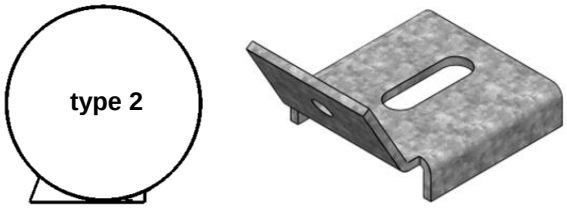

type 2 tank and Tank Clamp – 204660

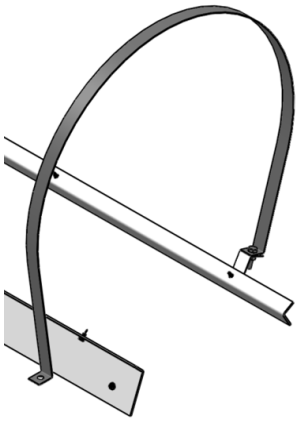

Reinforcement Plate / Angle and Tank Straps frame mounting kits – 12103998, 12103999

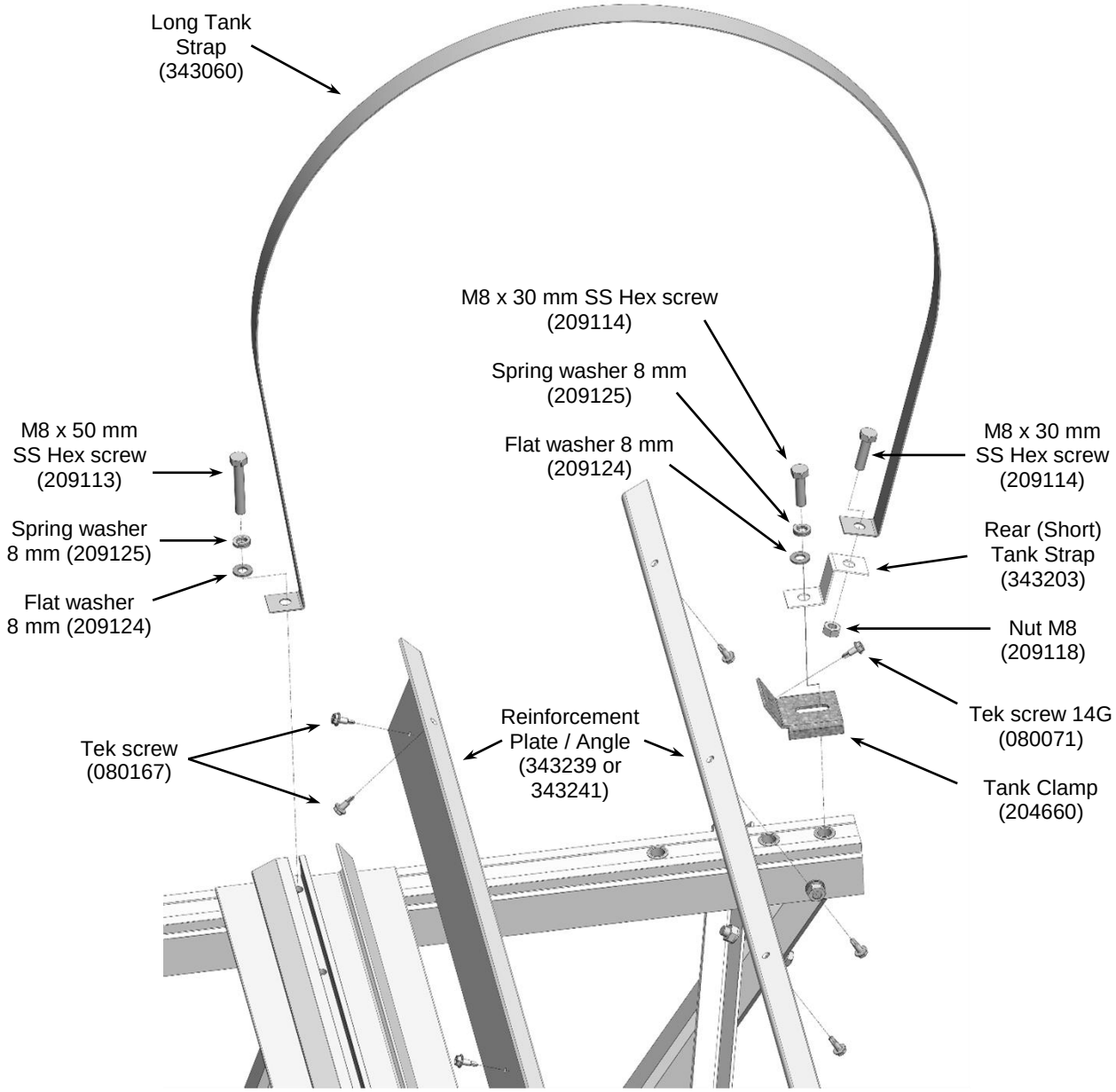

type 2 tank mounting
solar storage tank with flat base and Reinforcement Plate / Angle

Detail X
Tank Mounting – Type 2 Tank

DIMENSIONAL DRAWINGS

DIMENSIONS - THERMOSIPHON VARIABLE-PITCH FRAMES

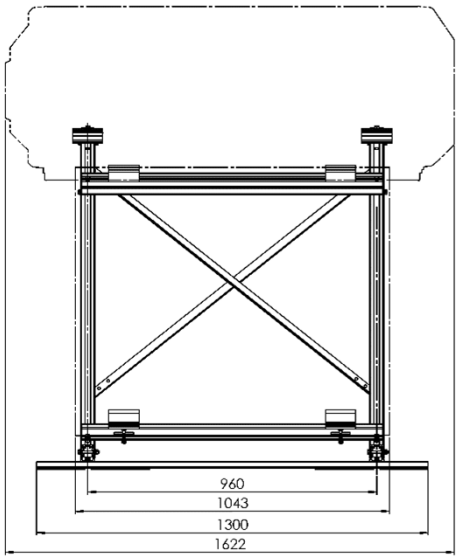

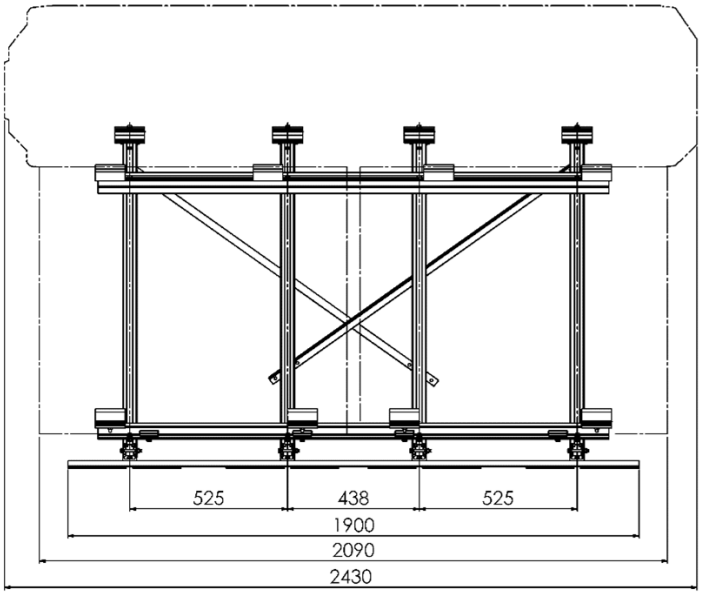

ANGLE	MAX OVERALL HEIGHT (MM)
15°	1166
17.5°	1261
20°	1355
22.5°	1446
25°	1535

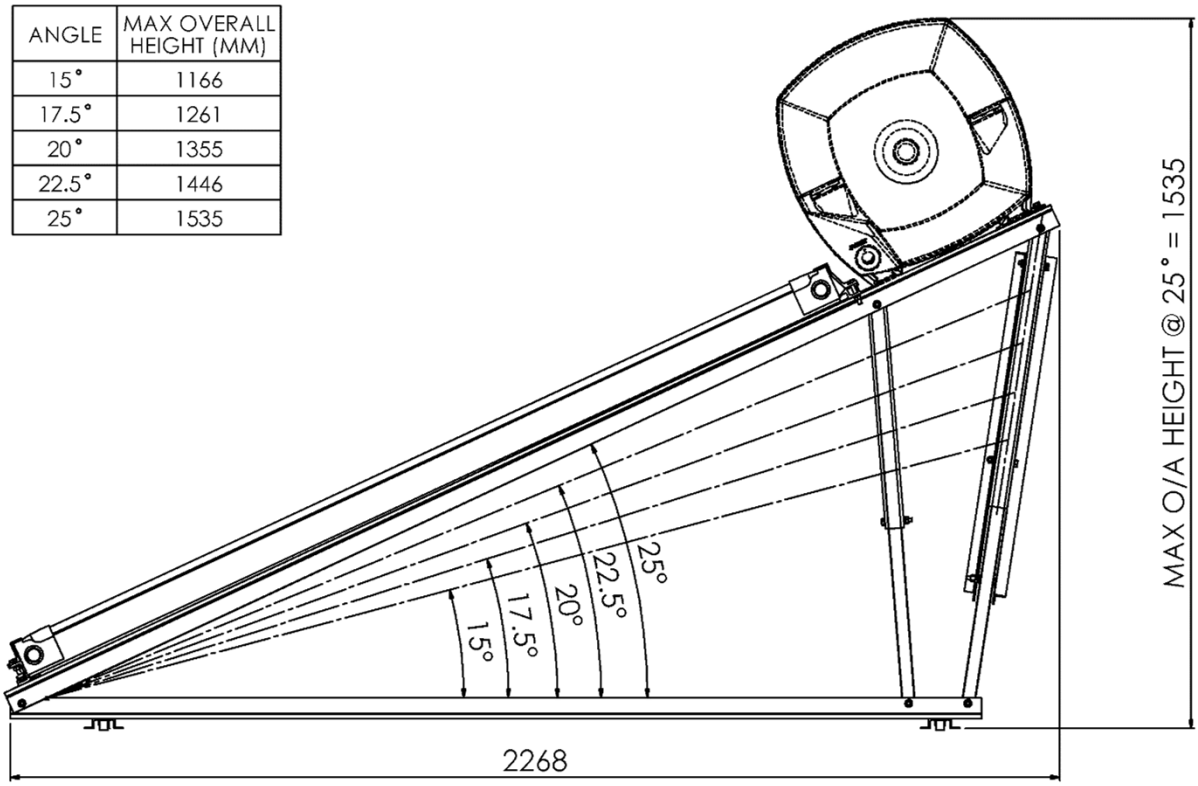

DIMENSIONS - COLLECTOR ONLY VARIABLE-PITCH FRAMES

2.0m² Collector Only Frames

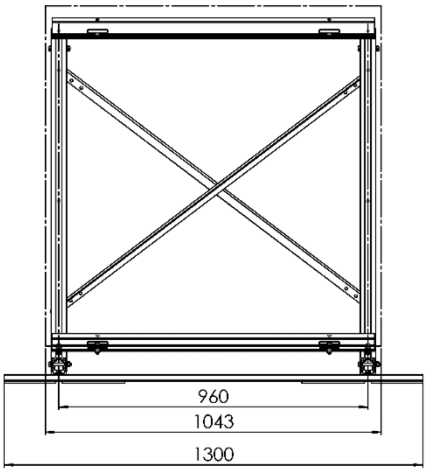

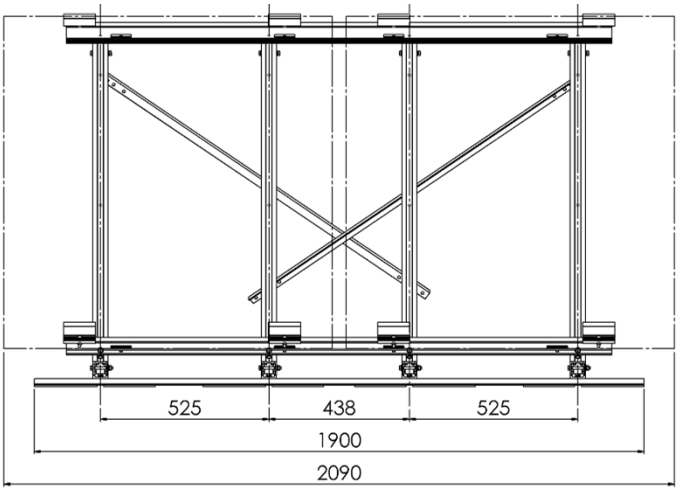

ANGLE	MAX OVERALL HEIGHT (MM)
20°	848
22.5°	924
25°	1002
27.5°	1078
30°	1155

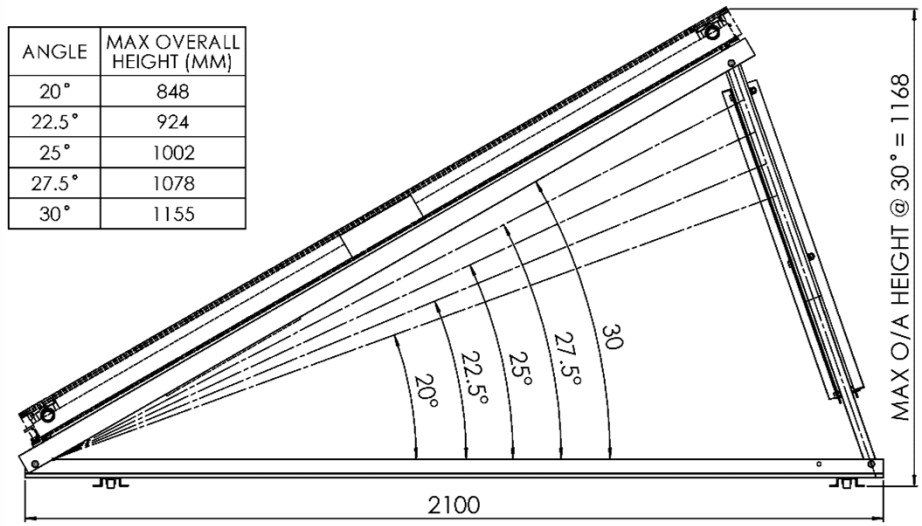

2.6m² Collector Only Frame

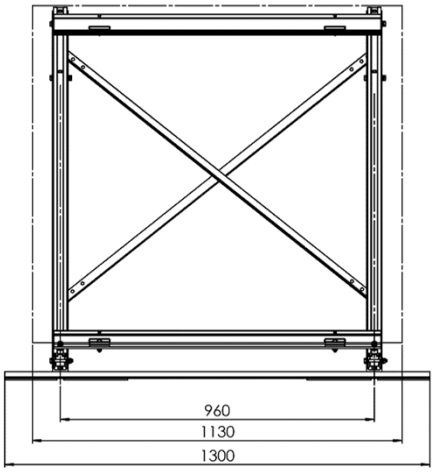

ANGLE	MAX OVERALL HEIGHT (MM)
15°	769
17.5°	863
20°	956
22.5°	1047
25°	1137

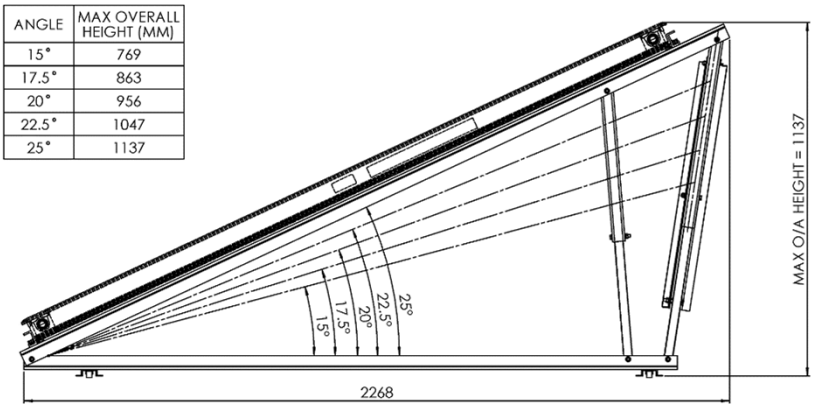

CHECK LIST

It is recommended to complete the part 1 of the check list prior to the assembly and installation of the frame on the roof and the part 2 of the check list once the installation has been completed.

Part 1 – Frame suitability for the installation

[ ] Determine the wind region, terrain category and wind class.
It may be necessary to confirm the terrain category and wind class with the local council.

[ ] Determine the location of the frame on the roof, average roof height, and b, d, h.

[ ] Determine the maximum angle of inclination of the frame for the location.

[ ] Determine whether additional battens are required.

[ ] Determine the type and number of fasteners required.

Part 2 – Frame installation

[ ] Installation of battens if required.

[ ] Location of the frame in correct position on roof allowing for correct set-backs.

[ ] Tightening of the screws into nutserts securing Bottom Chords to Base Plates.

[ ] Fixing of the Base Plate / Bottom Chord assembly to battens with correct fasteners.

[ ] Tightening of the screws and nuts securing the Top Chords to the Bottom Chords.

[ ] Tightening of the screws and nuts securing the upper and Bottom Chords to the telescopic legs.

[ ] Tightening of the screws and nuts securing the telescopic legs.

[ ] Tightening of the screws and nuts securing the rear bracing to the telescopic legs.

[ ] Tightening of the screws securing Collector Rail and Tank / Collector Rail to the Top Chords.

[ ] Installation and correct positioning of solar collectors.

[ ] Engagement of Envelope type collector into the retention feature of Tank / Collector Rail (thermosiphon frames).

[ ] Installation and correct positioning of the solar storage tank (thermosiphon frames).

[ ] Installation and tightening of the solar pipe work.

[ ] Installation of the Tank Straps (thermosiphon frame – type 2 tank only – 52H, 52L models).

[ ] Selection and installation of the correct Tank Clamps (thermosiphon frames).

[ ] Tightening of the screws and nuts on Tank Clamps (thermosiphon frames).

[ ] Installation of the Collector Clamps and the tightening of their screws and nuts to the Collector Rail and Tank / Collector Rail.

ON ROOF MOUNTING

The “On Roof Mounting” method is **not** suitable for tile, slate, shingle and similar roof types.

Before commencing assembly:

- Complete Part 1 – Frame suitability for the installation of the Check List on page 47.
- Confirm the correct parts kit boxes are available to construct the frame for the thermosiphon solar water heater or collectors being installed (refer to “Solar Water Heater Systems” on page 27).

Notes

- The roof cladding area where the Base Plates of the frame are to be installed must be even so the Base Plates sit flat and evenly on the roof cladding profile. This is to enable correct penetration length of all fixings through the Base Plates into the battens / purlins.
- Penetrations through the roofing material must be:
  - made neatly and kept as small as practicable;
  - waterproofed upon installation of the metal screws, Tek screws or bolts.
- Care should be taken not to mark Colorbond or other metal roof sheet with a marking pen and to remove all swarf from the metal roof as these can cause deterioration of the metal roofing material.

ESTABLISH LOCATION OF THE FRAME

Determine the position on the roof where the frame is to be installed.

- The frame is required to be fixed to two roof battens / purlins. Refer to “Steel Batten / Purlin Fixing Options” commencing on page 9 and “Timber Batten / Purlin Fixing Options” commencing on page 15 for the types of battens / purlins which may be used.
  - The centre to centre distance between the two roof battens / purlins, to which the Base Plates are secured, must be from 1590 mm to 2010 mm. The most common dimension between the two suitable purlins is 1800 mm, which suits 450 mm, 600 mm or 900 mm batten / purlin spacings.
  - The available distances between the Base Plates is determined by the 30 mm slots in the Bottom Chords. Available slot centres are 1620, 1680, 1740, 1800, 1860, 1920 and 1980 mm. These allow a distance between the two connecting battens / purlins from 1590 mm to 2010 mm. Refer to diagram Bottom Chord to Base Plate Connection Positions on page 49. The centre to centre distance between the Base Plates must be equal to the centre to centre distance between the two battens / purlins. It will be necessary to measure this distance.
  - The roof battens / purlins must be continuous over not less than three rafters or trusses for both one and two collector frames.
- If one or two new battens / purlins are required, select the position of and install the battens / purlins to which the frame is to be fixed. No connection point of the Base Plate to the batten / purlin is to be over a cantilevered part of a batten / purlin.
- If the batten / purlin is a 0.75 mm BMT G550 steel top hat section, install a 100 mm length of 40 x 40 x 1.6 mm SHS between the top hat section and each rafter / truss under and adjacent to the Base Plate location. The SHS is to be centred over the rafter / truss and secured by a screw through either side of the top hat section into the SHS.

  Refer to Detail – Metal Screw into Top Hat Batten with 100 mm length SHS and Detail – Bolt into Top Hat Batten with 100 mm length SHS on page 24.
- Refer to “Anywhere on Roof and Frame Offset Installations” on page 7.

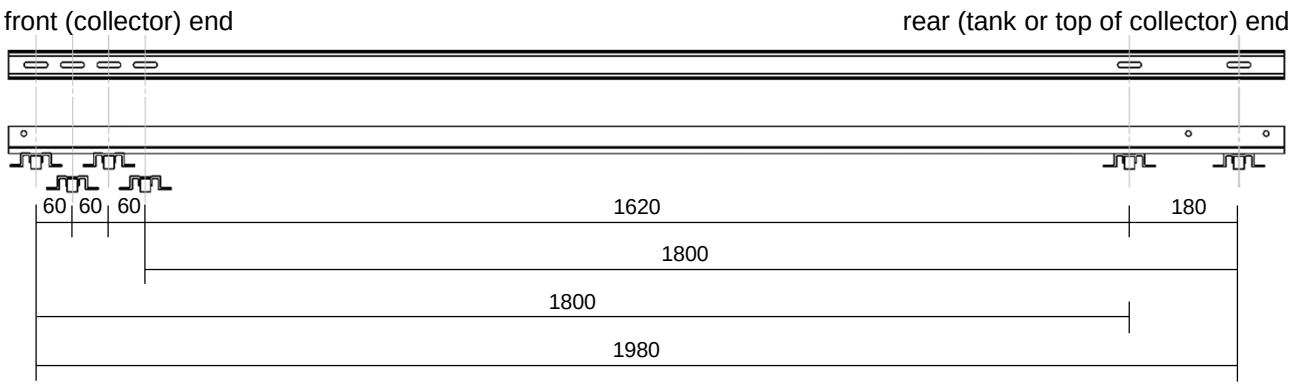

Diagram – Bottom Chord to Base Plate Connection Positions

ASSEMBLY OF THE FRAME BOTTOM CHORDS AND BASE PLATES

Refer to the assembly diagrams;

- solar storage tank with 1 x 2.0m^2 Collector – 150, 160, 180 Tanks – Diagram 1 on page 32.
- solar storage tank with 2 x 2.0m^2 Collector – 220, 300 Tanks – Diagram 2 on page 33.
- collector only with 1 x 2.0m^2 Collector – Diagram 3 on page 34.
- collector only with 2 x 2.0m^2 Collector – Diagram 4 on page 35.
- collector only with 1 x 2.6m^2 Collector – Diagram 5 on page 36.
- detail drawings A to X on pages 37 to 44.

Bottom Chords – 2100 mm long (without nutserts)

- There are two slots provided at one end of each Bottom Chord. This is the rear end of the Bottom Chord, and is the end which will support the solar storage tank or the top of the solar collectors.
- There are four slots provided at the other end of the Bottom Chord. This is the front end of the Bottom Chord, and is the end which will support the bottom of the solar collector(s).

Base Plates

- There are round holes with a nutsert in each Base Plate. These holes are used for connecting the Bottom Chords to the Base Plate.
- There are round holes and slots (without nutserts) in each Base Plate. These holes and slots are fastener holes to be used to connect the Base Plate through the roof cladding to the roof batten / purlin.

Assembly

- Loosely fit the Base Plates and the Bottom Chords together, fixing a screw into each nutsert in the Base Plates as follows:
  - Use one M8 x 25 mm Hex screw (209110), one 8 mm ID spring washer (209125 - Washer spring 8 x 14.3 x 2 mm (G304)) under the screw head and one 8 mm round washer ((209124 - Washer flat 8 mm (G304)) located between the spring washer and Bottom Chord, per connection.
  - *Rear end of Bottom Chord:* Use either slot provided at 75 mm or 255 mm from the rear end of the Bottom Chord to connect to the upper Base Plate.
  - *Front end of Bottom Chord:* Use one of the four slots provided at the front end of the Bottom Chord to connect to the lower Base Plate.
  - Select the holes or slots in the Bottom Chord that provide the correct batten to batten centre distance to secure the Base Plates. Refer to diagram Bottom Chord to Base Plate Connection Positions on page 49.

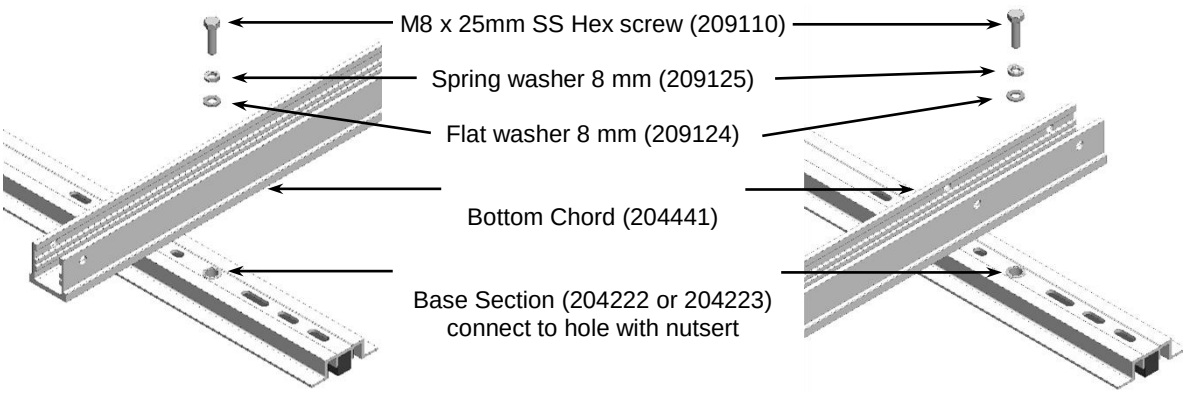

Bottom Chord to Base Plate connection

- Square up the frame by making sure the diagonals between the outside Bottom Chords are equidistant and ensure the centre to centre distance between the Base Plates is equal to the centre to centre distance between the two roof battens / purlins.

  The diagonals must be equidistant, otherwise the solar collectors will not fit onto the frame.

  - Tighten the screws in the nutserts, using a spanner.

Tighten

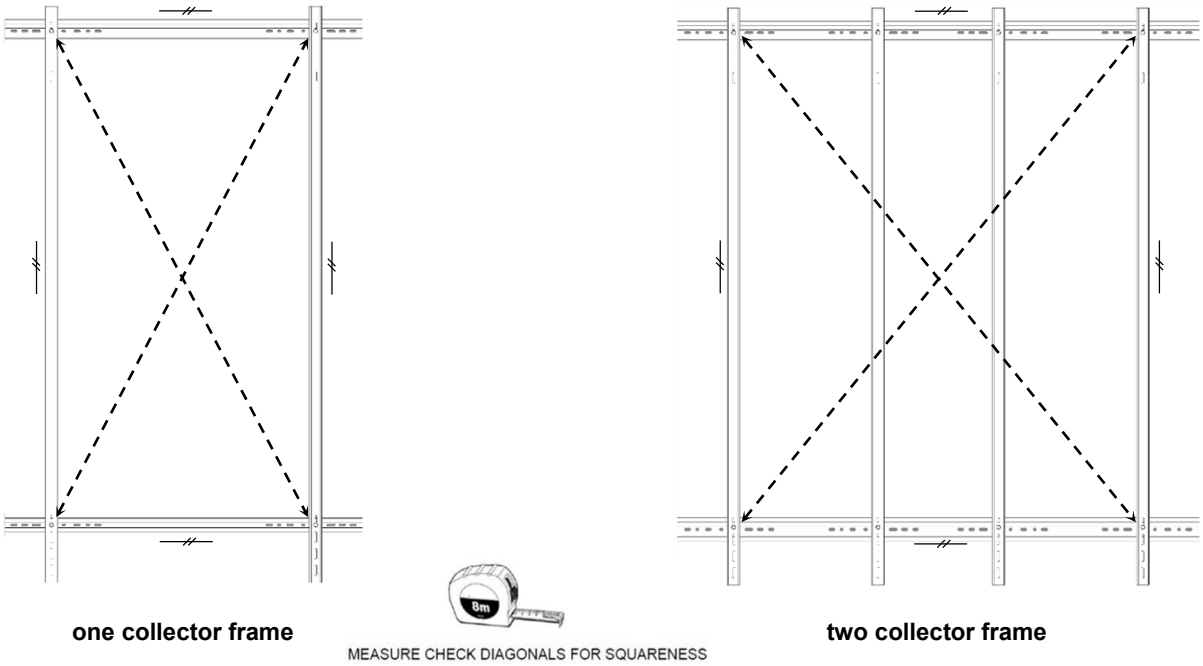

Square up frame and check distances

SECURING THE BASE PLATES / BOTTOM CHORDS ASSEMBLY TO ROOF

During the positioning and securing of the assembled frame base to the roof, ensure:

- the Base Plates are located over the two roof battens / purlins,
- the two outside Bottom Chords are as close as possible to adjacent rafters and when applicable not outside of the maximum frame offset distance from the rafters (refer to "Anywhere on Roof and Frame Offset Installations" on page 7),
- the fastener holes in the Base Plates are located over the crests of the roof cladding profile,
- the EPDM rubber foam tape when compressed will accommodate existing roof cladding fasteners,

Notes

- if existing roof cladding fasteners cannot be accommodated by the EPDM rubber because their profile is too high, then these fasteners must be replaced with lower profile fasteners approved for the roof sheet fixing application, particularly in Wind Region C.
- If the line of existing roof cladding fasteners which will be covered by the Base Plate is not within ± 5 mm of a straight line, then an existing fastener may need to be removed and relocated to fit under the EPDM rubber strip and the positioning webs within the Base Plate. Any penetration of the roof cladding from the removal of a fastener must be weatherproofed.

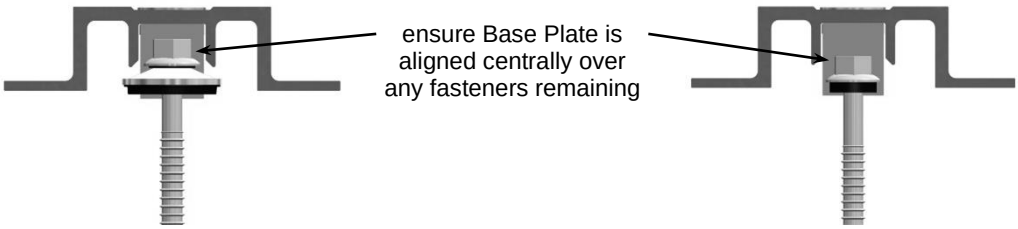

When selecting the locations where the metal screws, Tek screws or bolts are to penetrate the roof material:

- Use the slots in the Base Plate that match the crests of the roof cladding profile to enable penetrations to be made through the crest of the profile.

  Refer to the tables;

  - "Steel Batten / Purlin Fixing Options" on page 9 and
  - "Timber Batten / Purlin Fixing Options" on page 15,

  and to;

  - "Positioning of Fasteners" on page 21, and
  - "Fasteners and Requirements" commencing on page 21.

  for the types of fasteners which can be used for each batten type, and for the number and correct location of the fixing points in the Base Plates, and for typical connection details.

  Note: If fastening with bolts then pre-drill holes through EPDM foam tape in the Base Plate using a Ø6.5mm – Ø7.5mm drill bit.

Position and secure the assembled frame base to the roof:

- Remove the existing roofing fasteners which will be replaced by the screws or bolts used to secure the Base Plates.
- Replace and / or relocate remaining fasteners if required to enable the Base Plates to sit flat on the roof.
- Position the assembled frame base on the roof over the area where it is to be installed.
- Secure one Base Plate to the batten / purlin.
  - When fastening the Base Plate to the roof, use the appropriate outside slot on each end first to locate and line up the frame such that all other slots are correctly positioned relative to the roof cladding profile.
- Recheck the squareness of the frame by remeasuring the diagonals between the outside Bottom Chords ensuring they are equidistant. If necessary square up the frame base prior to securing the second Base Plate.
- Secure the second Base Plate to the batten / purlin.

INSTALLATION OF ADJUSTABLE LEGS AND TOP CHORDS

To assemble the adjustable Legs, Top Chords and Cross Braces of the Variable-Pitch collector frames:

- **Adjustable Inner Leg Assembly and Bottom Chord connections:** Fit the 28 mm adjustable Inner Legs (204450 – 500 mm long or 204451 – 625 mm long) to the rear end of the Bottom Chords, using the screws and flange nuts provided.

  The number of adjustable Inner Legs are:

	204450 – 500 mm long	204451 – 625 mm long
one collector 2.0m^2 collector only frame	-	2
two collector 2.0m^2 collector only frame	-	4
one collector thermosiphon frame	2	2
two collector thermosiphon frame	4	4
one collector 2.6m^2 collector only frame	2	2

  Each Inner Leg is to be placed between the flanges of each Bottom Chord.

  The adjustable Inner Leg has two opposing sides with a single hole centred 15 mm from one end (the bottom end). This end is to be orientated downwards and the hole used to connect the Inner Leg to the inside of the Bottom Chord.

  - The 625 mm long Inner Leg is to be connected to the hole centred 30 mm from the rear end of the Bottom Chord.
  - The 500 mm long Inner Leg used with the thermosiphon or collector only 2.6 m^2 collector frames is to be connected to the hole centred 158 mm from the rear end of the Bottom Chord.
  - Use a hex screw assembly of one screw (hex M8 x 60 SS – 209112) and flanged nut (M8 flanged SS – 209103) per fixing to connect the Inner Leg to the Bottom Chord.

  The other two sides of the Inner Leg have five holes. These holes are used to position the Outer Leg and secure the Cross Braces.

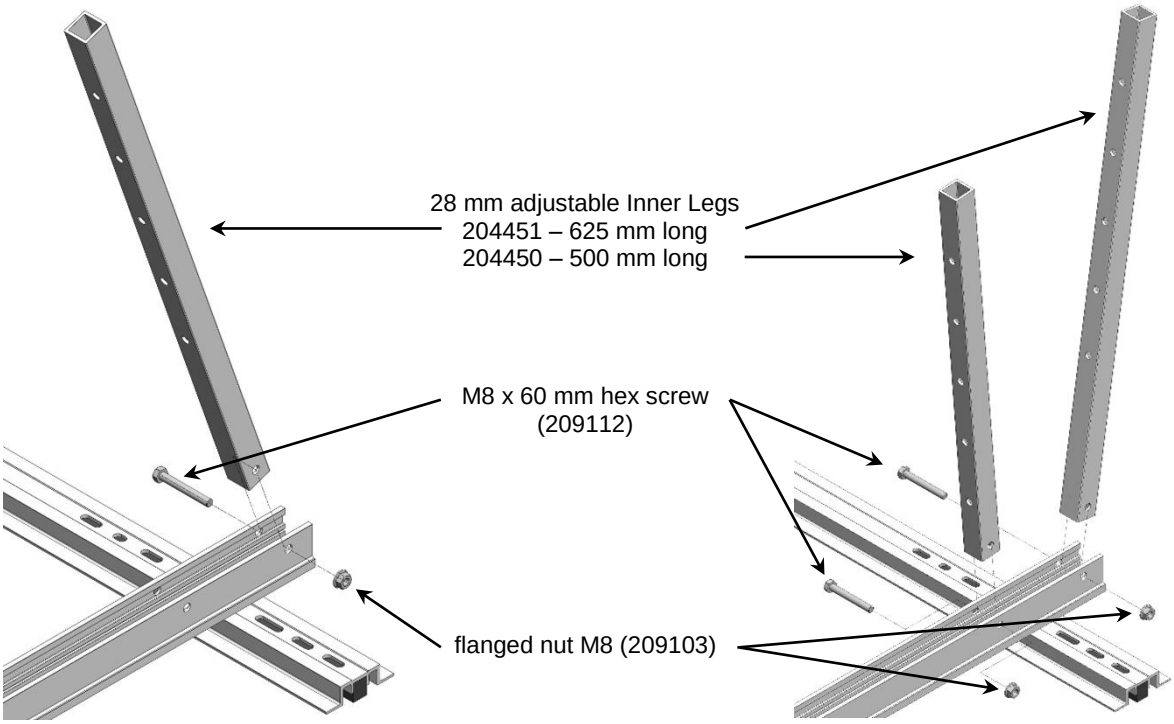

2.0m^2 collector only frames **thermosiphon and 2.6m^2 collector only frames**

Adjustable Inner Leg and Bottom Chord assembly

- **Adjustable Inner Leg and Outer Leg connections:** Slide the 40 mm Outer Legs (204452 – 500 mm long or 204453 – 625 mm long) over and connect to the adjustable Inner Legs, using the screws and flange nuts provided. The number of Outer Legs are:

	204452 – 500 mm long	204453 – 625 mm long
one collector 2.0m^2 collector only frame	-	2
two collector 2.0m^2 collector only frame	-	4
one collector thermosiphon frame	2	2
two collector thermosiphon frame	4	4
one collector 2.6m^2 collector only frame	2	2

Each Outer Leg is to be placed over the Inner Leg.

The Outer Leg has two opposing sides with a single hole centred 15 mm from one end (the top end). This end is to be orientated upwards and the hole used to connect the Outer Leg to the Top Chord.

The other two sides of the Outer Leg have two holes. The lower hole is used to position and secure the Outer Leg to the adjustable Inner Leg and the upper and lower holes are used secure the Cross Braces.

- The 625 mm long Outer Leg is used over the Inner Leg at the rear end of the Bottom Chord.
- The 500 mm long Outer Leg is used with the thermosiphon or collector only 2.6 m^2 collector frames and used over the Inner Leg 158 mm from the rear end of the Bottom Chord.
- Place the Outer Leg over the adjustable Inner Leg. Ensure the side of the Outer Leg with the two holes is lined up with the side of the adjustable Inner Leg with the five holes.
- Align the bottom hole in the Outer Leg with one of the five holes in the adjustable Inner Leg, insert a screw (hex M8 x 60 SS – 209112) and secure with a flanged nut (M8 flanged SS – 209103).

  The inclinations which can be achieved are:

Frame type	**collector only 2.0m^2**	**thermosiphon, collector only 2.6m^2**
Top hole	30° inclination	25° inclination
2nd hole from top	27.5° inclination	22.5° inclination
Middle hole	25° inclination	20° inclination
2nd hole from bottom	22.5° inclination	17.5° inclination
Bottom hole	20° inclination	15° inclination

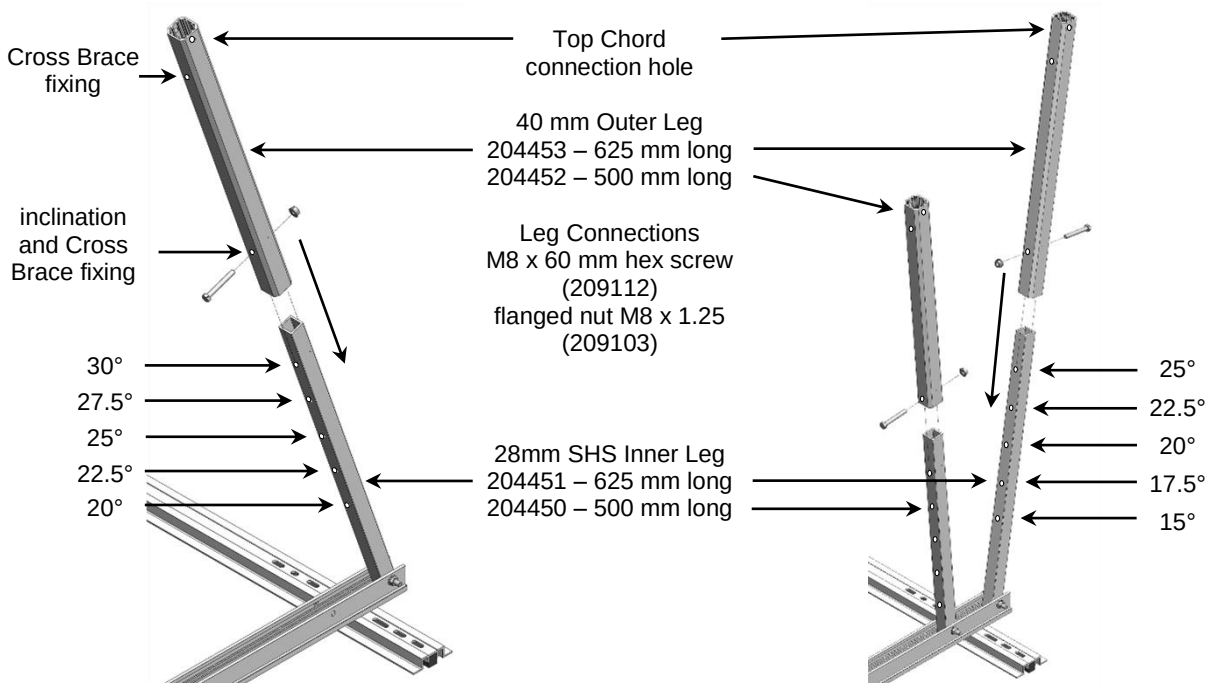

2.0m^2 collector only frames **thermosiphon and 2.6m^2 collector only frames**

Adjustable Inner and Outer Leg assembly

- **Top Chord Connections:** Connect the Top Chord (204440 – 2495 mm long or 204442 – 2050 mm long) to the Bottom Chord and legs, using the screws and flange nuts provided.

  There are two Top Chords per frame with one collector and four per frame with two collectors.

  - *Top Chord:* The Top Chord has a web with holes and nutserts and vertical flanges with two or three holes without nutserts.

    At the lower (front) end of the Top Chord, the web has two holes with nutserts, centred 30 mm and either 47.5 mm or 55 mm from the end. The flanges at this end is to be connected to the Bottom Chord at the front of the frame.

    At the upper (rear) end of the Top Chord, the web as one or four holes with nutserts and each flange has one or two holes. The flanges at this end are to be connected to the adjustable legs at the rear of the frame.

  - *Top Chord and Bottom Chord connection:* The flanges of the Top Chord fit over the outside of the flanges of the Bottom Chord. Through the round holes in the flanges of both Chords, insert a screw (hex M8 x 60 SS – 209112) and secure with a flanged nut (M8 flanged SS – 209103), to connect the Top Chord and Bottom Chord at their outer flanges.

  - *Top Chord and Outer Legs connection:* The Outer Leg fits inside of the flanges of the Top Chord. Line up the round hole on the flanges at the rear end of the Top Chord to the top hole on the Outer Leg. Through the round holes in the flanges of the Top Chord, secure to the Outer Leg using one screw (hex M8 x 60 SS – 209112) and a flanged nut (M8 flanged SS – 209103).

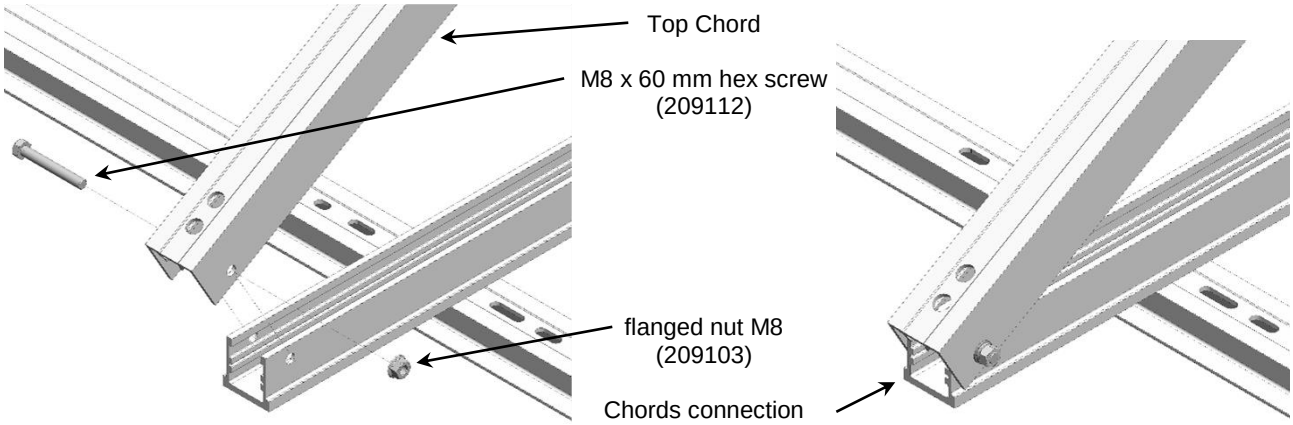

Top and Bottom Chord connection

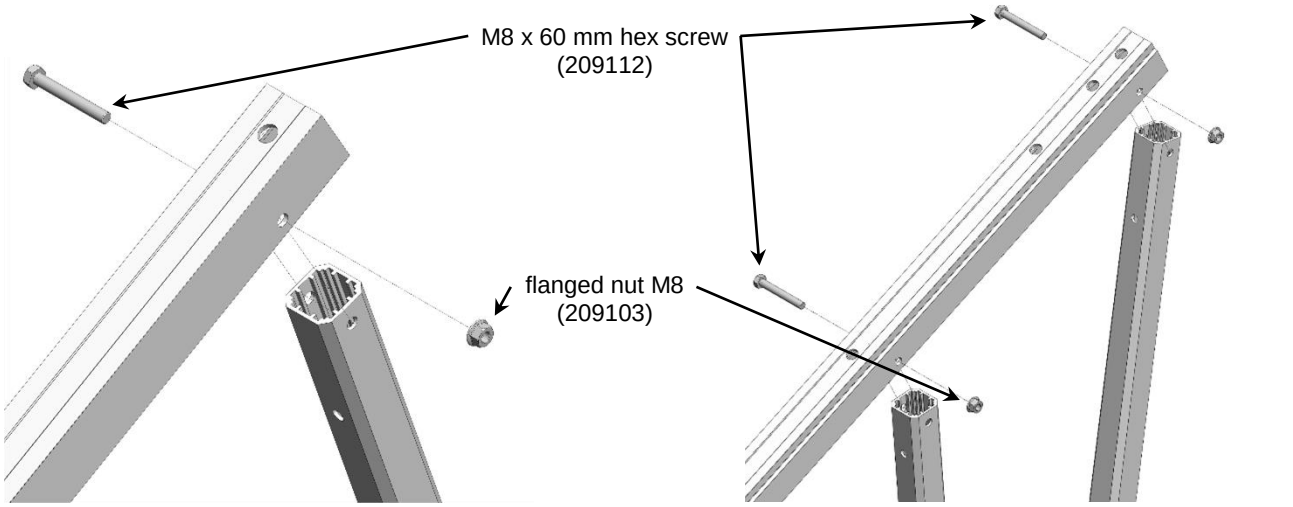

2.0m² collector only frames **thermosiphon and 2.6m² collector only frames**

Top Chord and adjustable leg connection

- **Cross Brace connections:** Connect the Cross Braces to the Outer Leg members of the frame. A frame has two Cross Braces. One Cross Brace is to be located at the rear side (outside) of the adjustable leg assemblies and the other on the front side (inside) of the assemblies. The Cross Brace has holes at either end of its vertical face.

  On a frame with one collector, one Cross Brace extends from the top hole of one Outer Leg to the bottom hole of the other Inner Leg. One Cross Brace is to be located at the rear side (outside) of the adjustable leg members and the other on the front side (inside) of the members. The two Cross Braces are to form a crisscross pattern.

  On a frame with two collectors, one Cross Brace extends from the top hole of the first Outer Leg to the bottom hole of the third Inner Leg. One Cross Brace is to be located at the rear side (outside) of the adjustable leg members and the other on the front side (inside) of the members. The inside Cross Brace extends from the top hole of the opposite (fourth) Outer Leg to the bottom hole of the second Inner Leg. The two Cross Braces are to form a crisscross pattern.

  If the frame is set at its lowest angle of inclination, then the Cross Brace is to be connected at the bottom using the screw and flanged nut connecting the Outer and Inner Legs.

  Angle Brace and Outer Legs connection: Connect the upper end of the Cross Brace to the top hole of the Outer Leg using one screw (hex M8 x 60 SS – 209112) and flanged nut (M8 flanged SS – 209103).

  Connect the lower end of the Cross Brace to the lowest suitable hole in the adjustable leg assembly using one screw (hex M8 x 60 SS – 209112) and flanged nut (M8 flanged SS – 209103).

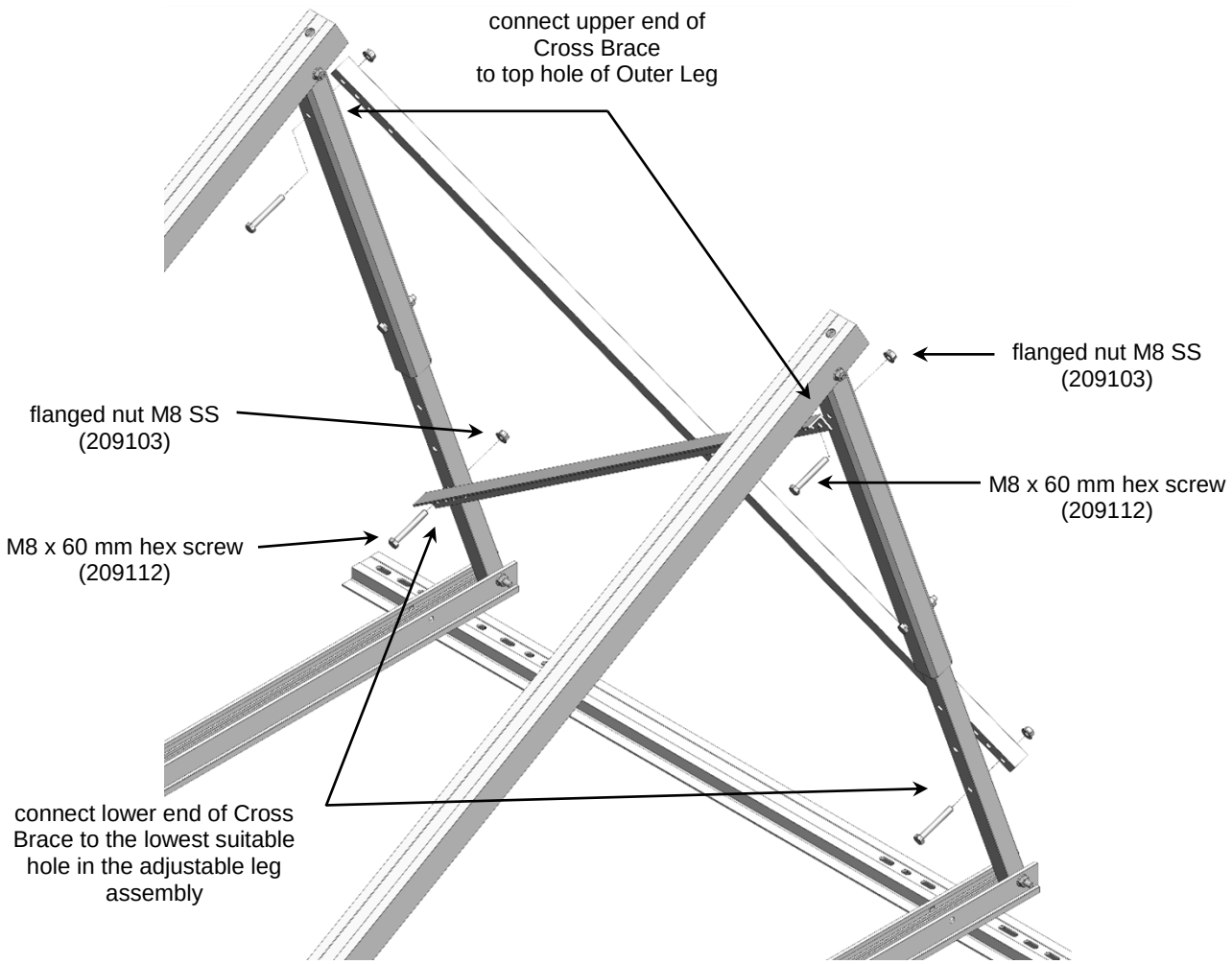

Cross Braces and adjustable legs connections – single 2.0m^2 collector only frame shown

INSTALLING THE BOTTOM COLLECTOR RAIL TO TOP CHORDS – ALL FRAMES

- Position the Collector Rail on the Top Chords to line up with the;
  - **Envelope type collector** – first hole from at the bottom end of the Top Chords.
  - **Folded-tray type collector** – second hole from the bottom end of the Top Chords.

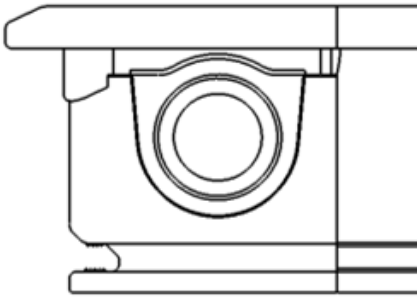

Envelope collector profile

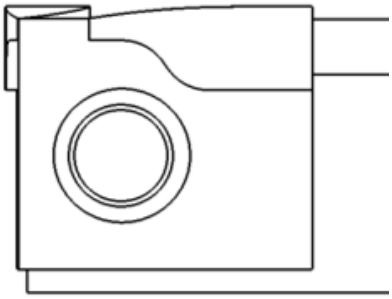

folded-tray collector profile

- Fix the Collector Rail to each of the Top Chords using:
  - one 30 mm screw (209114 - set screw hex M8 x 30 mm SS 304)
  - one 8 mm ID spring washer (209125 - washer spring 8 x 14.3 x 2 mm (G304)) directly under the screw head.
  - one 8 mm round washer (209124 - washer flat 8 mm (G304)) located between the spring washer and Collector Rail.
- Tighten the screws, using a spanner.

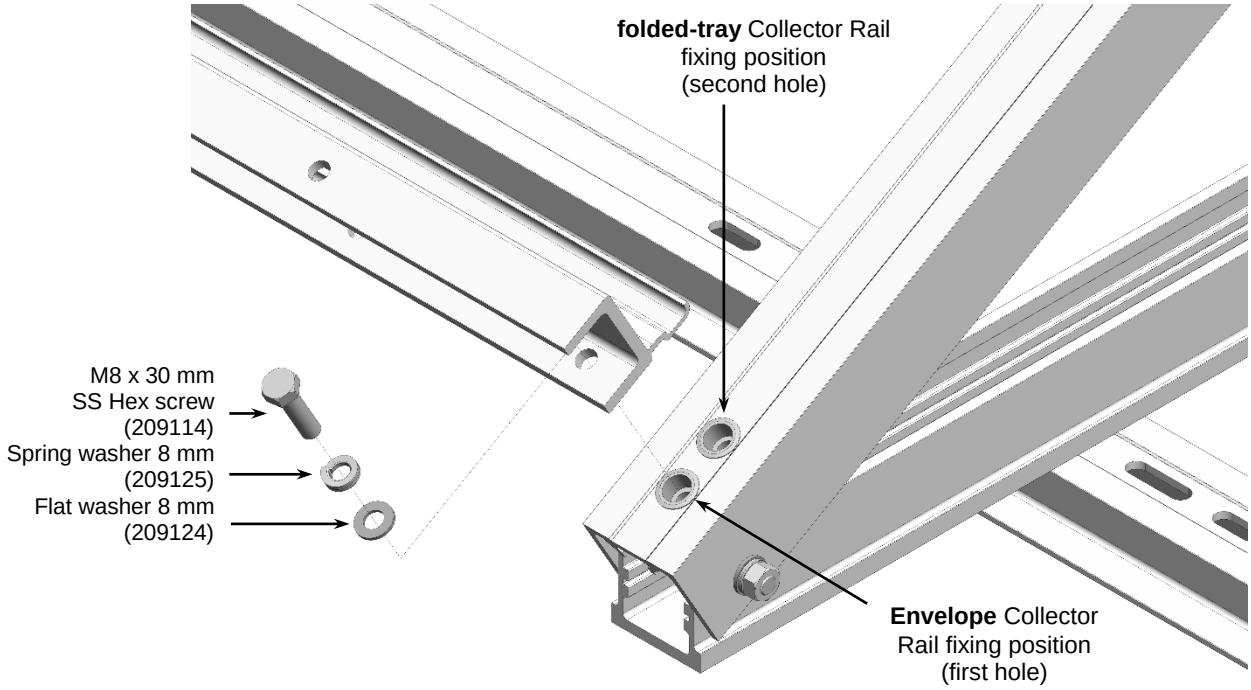

Fixing bottom Collector Rail to Top Chords – all frames

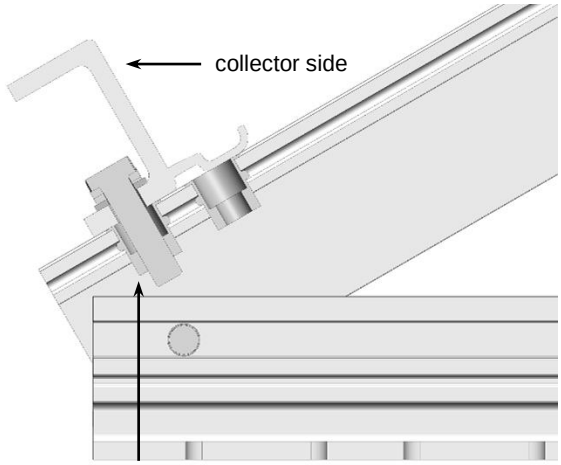

Envelope Collector Rail fixing position
(first hole)

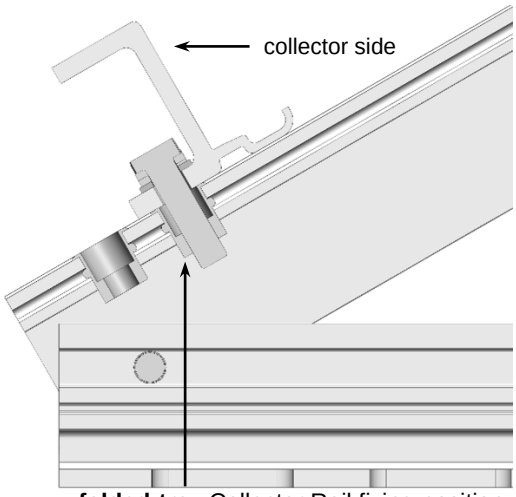

folded-tray Collector Rail fixing position
(second hole)

Envelope and folded tray bottom rail positions – all frames

INSTALLING THE TOP COLLECTOR RAIL TO TOP CHORDS – COLLECTOR ONLY FRAME

- Position the Collector Rail on the rear end of the Top Chord. With a 2.6m^2 collector frame, line up the rail with the third hole, centred 165 mm from the rear end of the Top Chord.
- Fix the Collector Rail to each of the Top Chords using:
  - one 30 mm screw (209114 - set screw hex M8 x 30 mm SS 304),
  - one 8 mm ID spring washer (209125 - washer spring 8 x 14.3 x 2 mm (G304)) directly under the screw head,
  - one 8 mm round washer (209124 - washer flat 8 mm (G304)) located between the spring washer and Collector Rail.
- Tighten the screws, using a spanner.

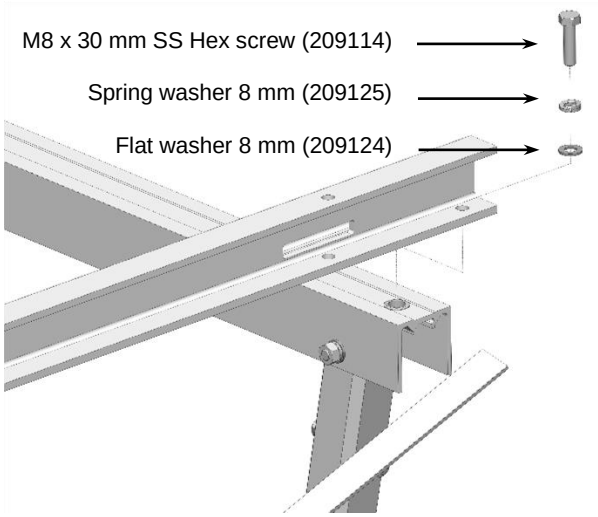

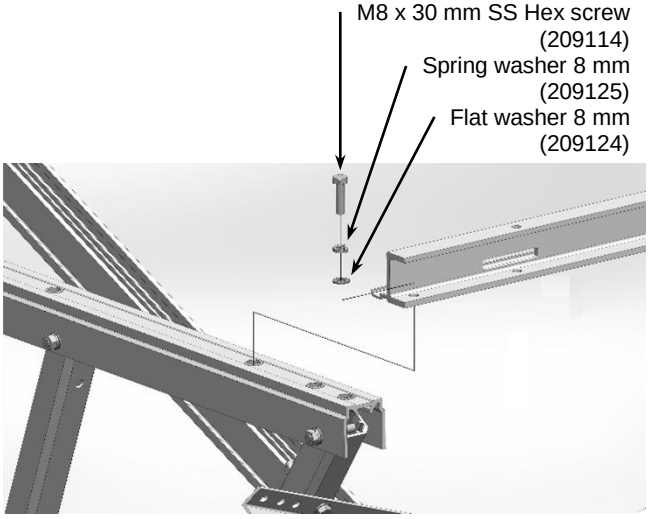

2.0m^2 Collector Only Frames **2.6m^2 Collector Only Frames**

Fixing top Collector Rail to Top Chords

INSTALLING THE TANK / COLLECTOR RAIL TO TOP CHORDS – THERMOSIPHON FRAME

Fitting Collector Clamps to Tank / Collector Rail (Folded-Tray Collector only)

When installing a thermosiphon system with collectors of a folded-tray design, the Collector Clamps can be fitted to the Tank / Collector Rail prior to or after fitting the Tank / Collector Rail to the Top Chords. However they should be fitted prior to the placing of the solar storage tank on the frame, as access to the nut may be difficult after the tank has been installed.

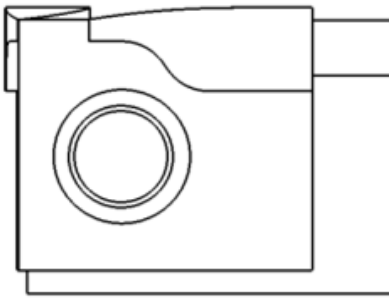

Folded-tray collector profile

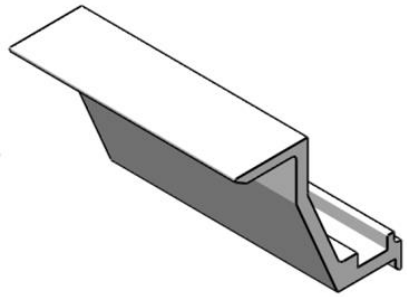

Collector Clamp 204428 – Tank / Collector Rail

- Fit the Collector Clamps (204428 - two per solar collector) to the Tank / Collector Rail.
  - Take care to use the correct holes in the Tank / Collector Rail to fit the Collector Clamps, as shown in the diagram "Collector Clamp bolt holes (underside view of Tank / Collector Rails)".
  - Use a 50 mm screw (209113 - Set screw Hex M8 x 50 mm SS 304), an 8 mm round washer ((209124 - Washer flat 8 mm (G304)) located under the Tank / Collector Rail, and a 8 mm ID spring washer (209125 - Washer spring 8 x 14.3 x 2 mm (G304)) under the nut (209118 - Nut M8 x 1.25 mm (G304)).
  - Tighten the screws.

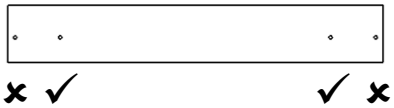

one collector Tank / Collector Rail

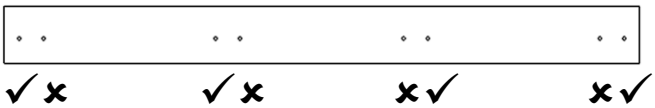

two collector Tank / Collector Rail

Collector Clamp bolt hole positions (underside view of Tank / Collector Rails)

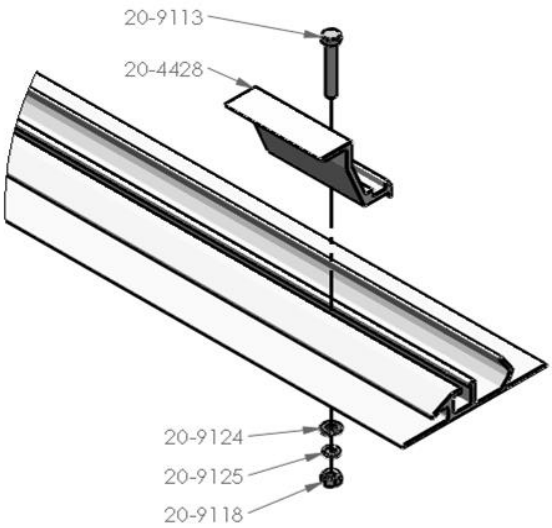

Tighten

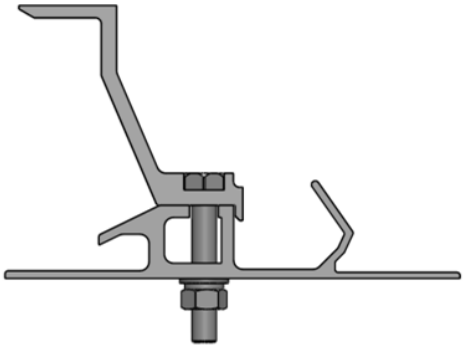

Fitting folded-tray Collector Clamps to Tank / Collector Rail

Fitting Tank / Collector Rail to Top Chords

- Position the Tank / Collector Rail on the Top Chord to line up with the fourth hole, centred 462 mm from the rear end of the Top Chord.
- Fix the Tank / Collector Rail to each of the Top Chords using:
  - one 50 mm screw (209113 - set screw hex M8 x 50 mm SS 304),
  - one 8 mm ID spring washer (209125 - washer spring 8 x 14.3 x 2 mm (G304)) directly under the screw head,
  - one 8 mm round washer (209124 - washer flat 8 mm (G304)) located between the spring washer and Tank / Collector Rail.
- Tighten the screws, using a spanner.

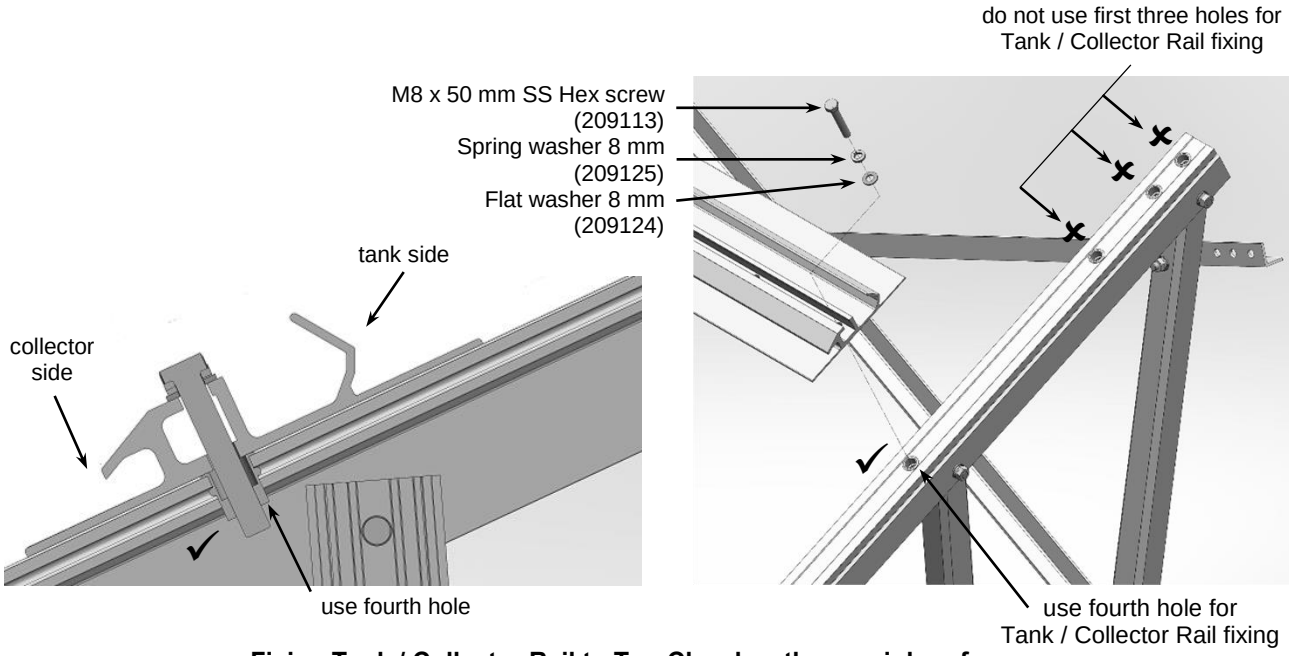

Fixing Tank / Collector Rail to Top Chords – thermosiphon frames

INSTALLING THE SOLAR COLLECTORS

Confirm the correct position of the bottom Collector Rail for the collector type to be installed.

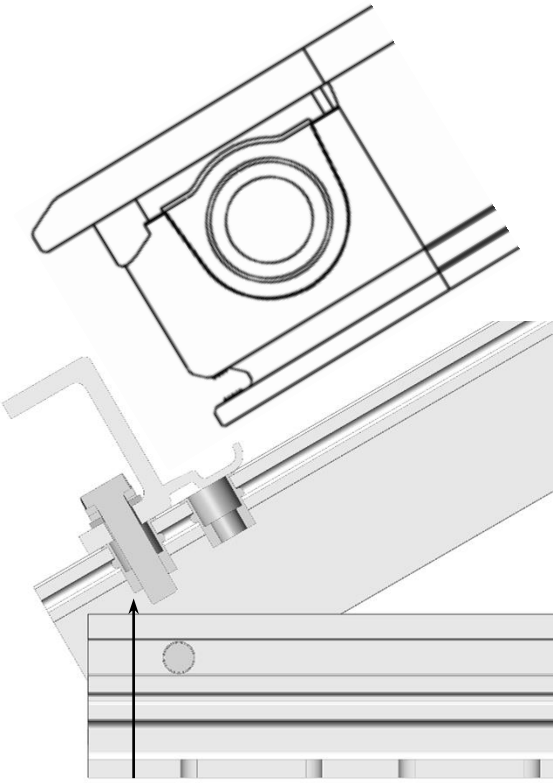

Envelope Collector Rail fixing position
(first hole)

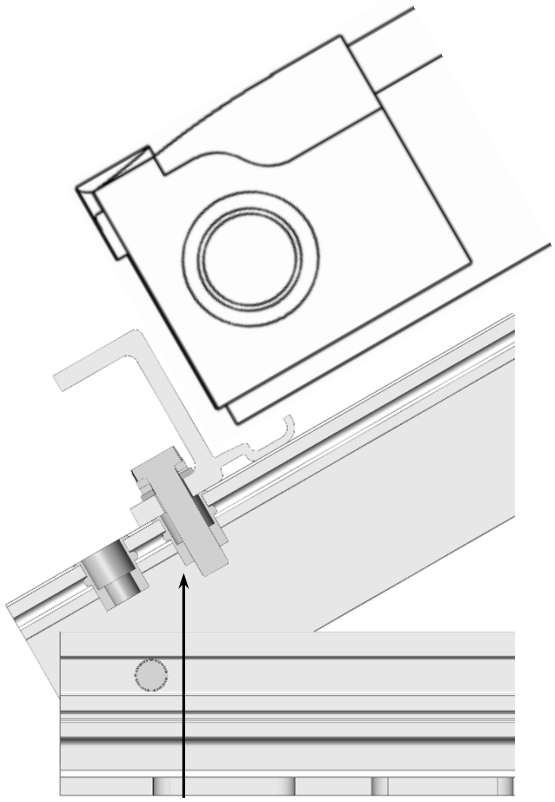

folded-tray Collector Rail fixing position
(second hole)

Envelope and folded tray bottom rail positions – all frames

INSTALLING THE FIRST COLLECTOR

- Position the top end of the first solar collector into the Tank / Collector Rail (thermosiphon frame) or the top Collector Rail (collector only frame) and the bottom end of the solar collector onto the bottom Collector Rail.
  - With the base of the upper end of the collector resting on the Top Chords, slide the collector upwards along the Top Chords until it is engaged with the Tank / Collector Rail or Collector Rail.
    - **Envelope collector** – the bottom lip of the collector must fully engage under the retention feature of the Tank / Collector Rail on a thermosiphon frame.

      ⚠ **Warning:** the bottom lip of the collector **<u>must not</u>** sit on top of the retention feature of the Tank / Collector Rail.
    - **Folded-tray collector** – the upper end of the collector must be against the retention feature of the Tank / Collector Rail on a thermosiphon frame and fully engage under the Collector Clamps.
  - Lower the bottom end of the solar collector carefully onto the foot of the Collector Rail. The bottom end must be against the face of the Collector Rail.
- Take care not to scratch or damage the external surface of the solar collector when positioning onto the Tank / Collector Rail and Collector Rail.
- Refer to diagrams under "Positioning an Envelope Collector" on page 61 and "Positioning a Folded-Tray Collector" on page 62.

Positioning an Envelope Collector

Thermosiphon frame

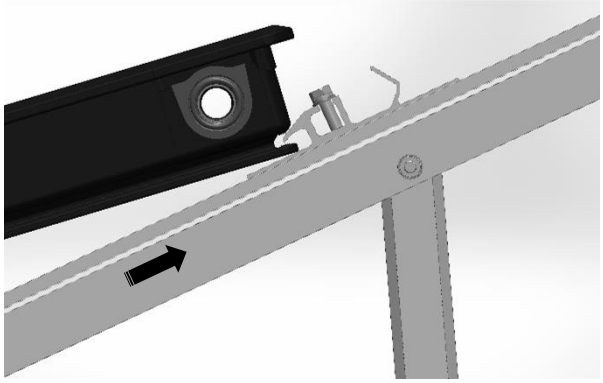

slide collector up to engage into Tank / Collector Rail

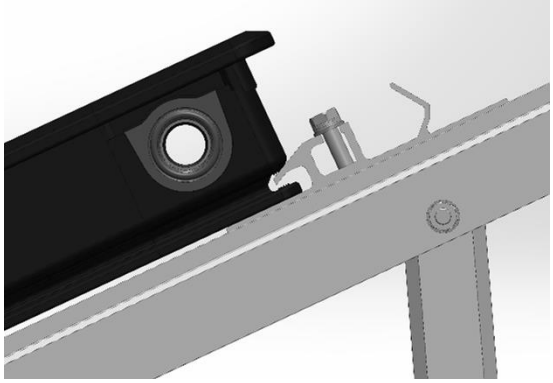

bottom lip **must fully engage**
under the retention feature of Tank / Collector Rail

Collector frame

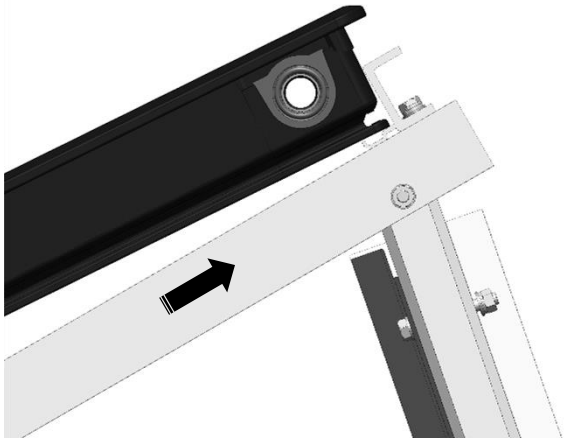

slide collector up onto the Collector Rail

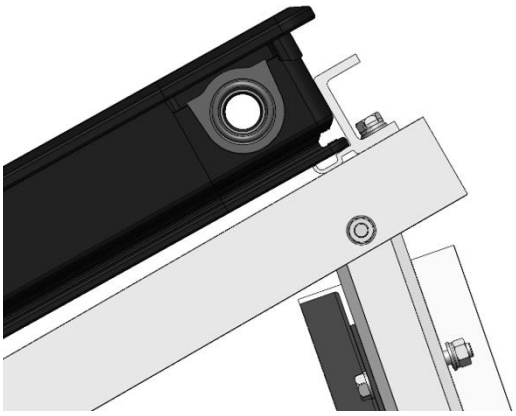

collector must be on Collector Rail and
pushed up to the face of the rail

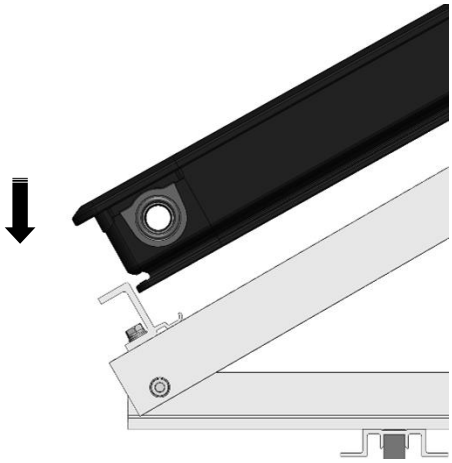

lower bottom end carefully
onto the foot of the Collector Rail

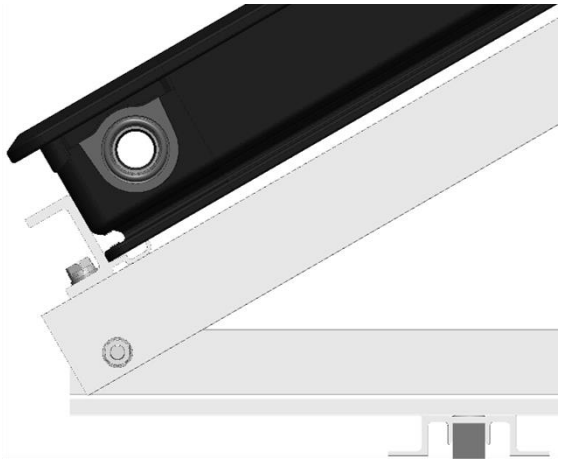

bottom end of collector
in position on Collector Rail

Positioning a Folded-Tray Collector

Thermosiphon frame

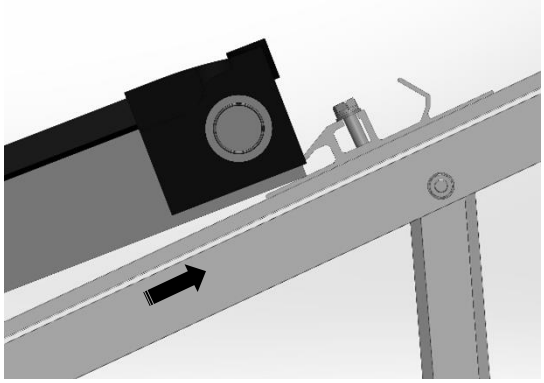

slide collector up onto tank / Collector Rail

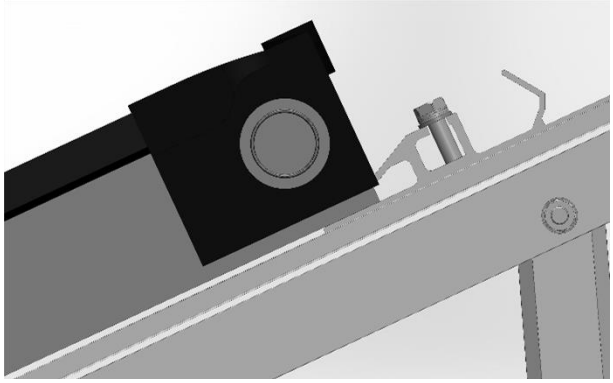

position collector against the
retention feature of Tank / Collector Rail

Collector frame

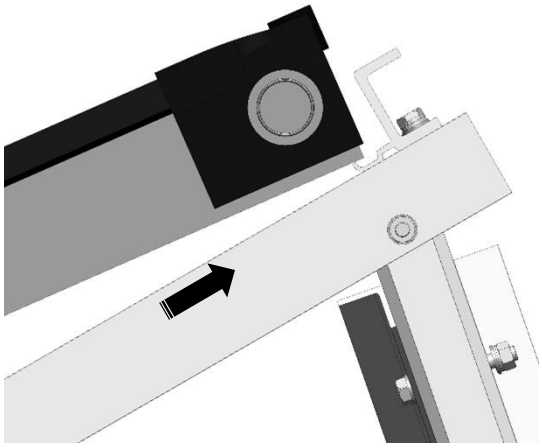

slide collector up onto the Collector Rail

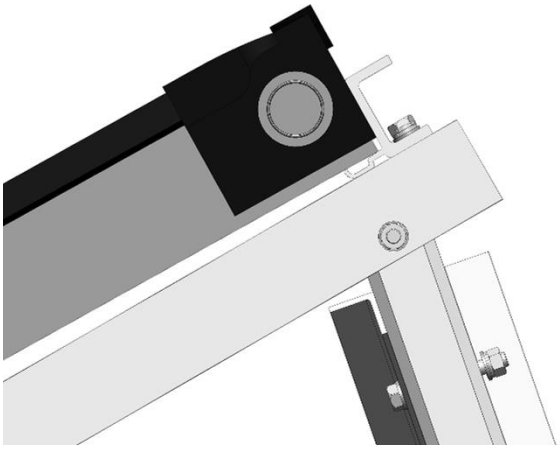

collector must be on Collector Rail and
pushed up to the face of the rail

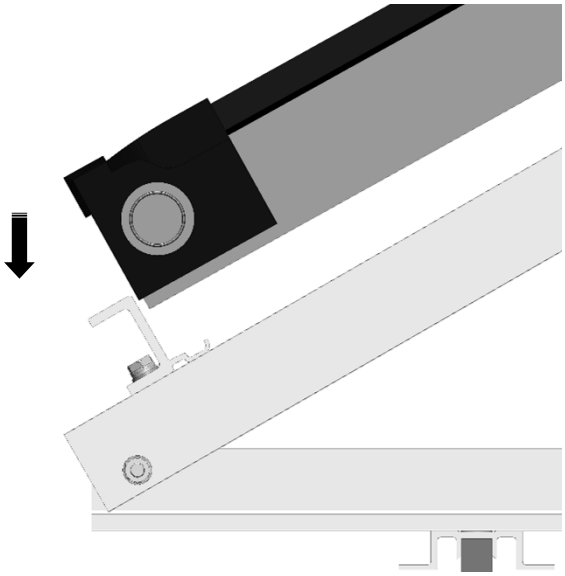

lower bottom end carefully
onto the foot of the Collector Rail

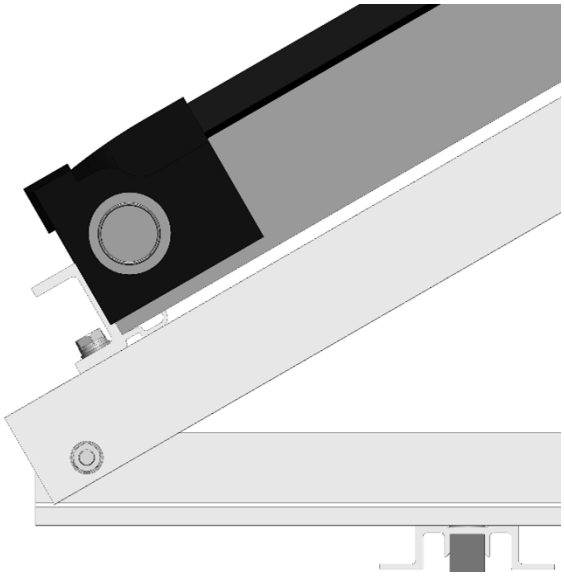

bottom end of collector
in position on Collector Rail

INSTALLING A SECOND COLLECTOR

- Insert the two collector unions (two collector system) into the sockets of the first solar collector and loosely screw each gland nut into its socket.
- Position the top of the second solar collector (two collector system) into the Tank / Collector Rail or top Collector Rail and the bottom of the solar collector onto the bottom Collector Rail, following the same procedure as before.
- Slide the second solar collector over to engage the two collector unions and loosely screw each gland nut into its socket.
- Centralise the solar collector(s) horizontally on the frame and tighten the gland nuts.

Tighten

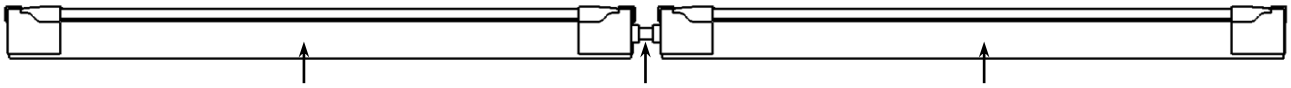

INSTALLING THE COLLECTOR CLAMPS – COLLECTOR RAILS

- Loosely fit the Collector Clamps, two per solar collector to the bottom Collector Rail and, for a collector only frame, two per solar collector to the top Collector Rail.
  - The appropriate clamp to suit the collector must be used. Use clamp 204424 for the Envelope collector and clamp 204431 for folded-tray collectors. For Envelope collectors, the clamps are inserted in the slots in the web of the Collector Rail and are fixed to the lower web of the Collector Rail. For folded-tray collectors, the clamps are fixed to the upper web of the Collector Rail.

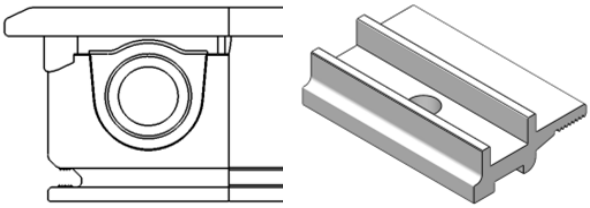

Envelope profile and Collector Clamp – 204424 Collector Rail location

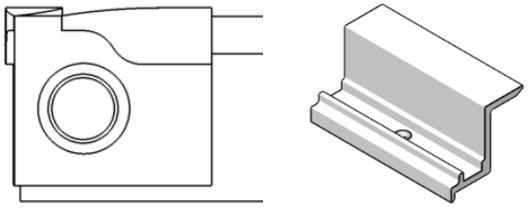

folded-tray profile and Collector Clamp – 204431 Collector Rail location

  - For each clamp, use;
    - one 30 mm screw (209114 - set screw hex M8 x 30 mm SS 304)
    - one 8 mm ID spring washer (209125 - washer spring 8 x 14.3 x 2 mm (G304)) directly under the nut (209118 - nut M8 x 1.25 mm (G304))
    - one 8 mm round washer (209124 - washer flat 8 mm (G304)) located between the spring washer and the collector rail.
- Refer to the diagrams Collector Clamping – Bottom Collector Rail on page 64 and Collector Clamping – Top Collector Rail on page 64.
- Check the collectors are centred on the frame.
- For a frame with a thermosiphon solar water heater, do not tighten the Collector Clamps at this stage as the collectors may need to be moved slightly to accommodate the tank positioning and pipe work.
- For a frame with collectors only installed;
  - tighten the nut at each Collector Clamp, using a spanner
  - check and securely tighten all other connections on the frame
  - complete Part 2 – Frame installation of the Check List on page 47
  - make the pipe connections as per the installation instructions supplied with the roof kit.

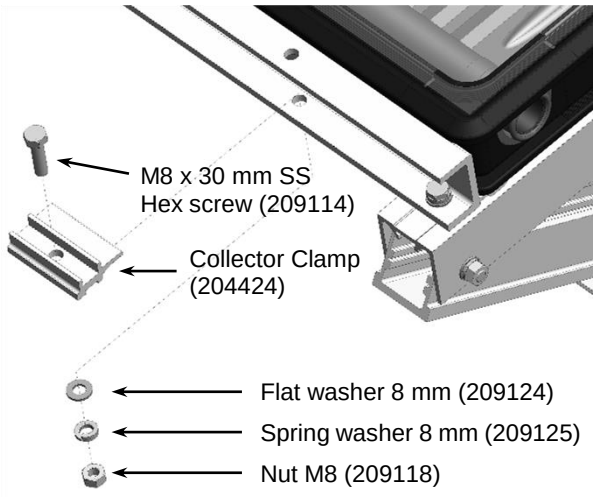

Envelope collector type

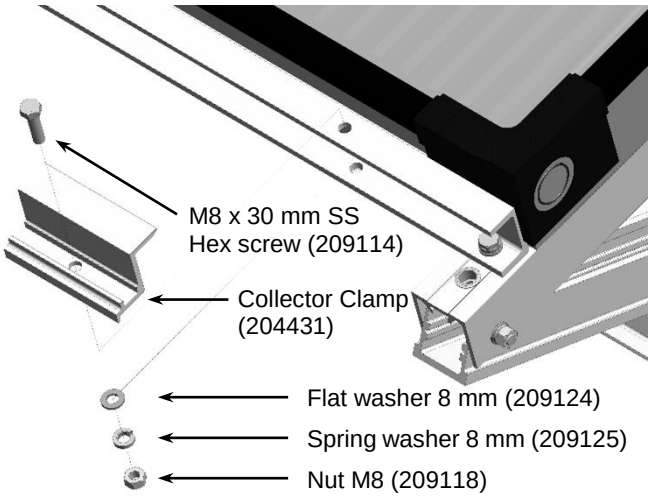

folded-tray collector type

Collector Clamping – Bottom Collector Rail

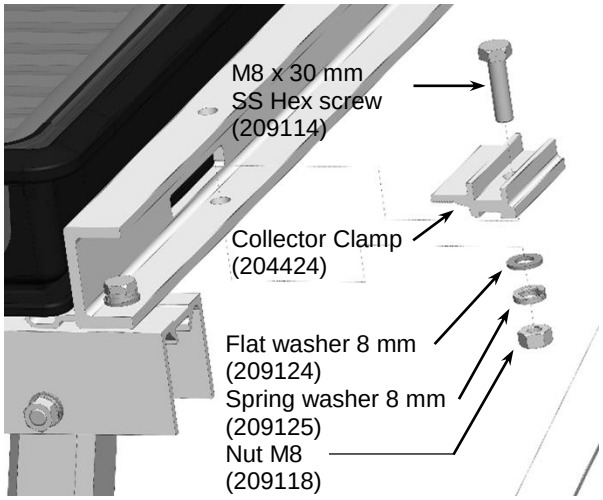

Envelope collector type

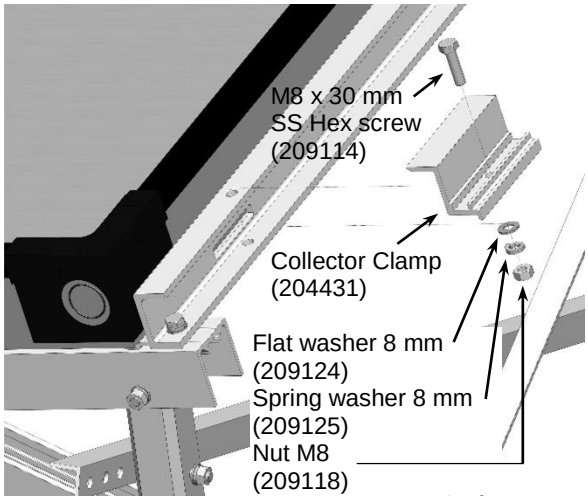

folded-tray collector type

Collector Clamping – Top Collector Rail

Note: For detail of attaching the Collector Clamps for a folded tray collector to the Tank / Collector Rail on a thermosiphon frame, refer to "Fitting Collector Clamps to Tank / Collector Rail (Folded-Tray Collector only)" on page 58.

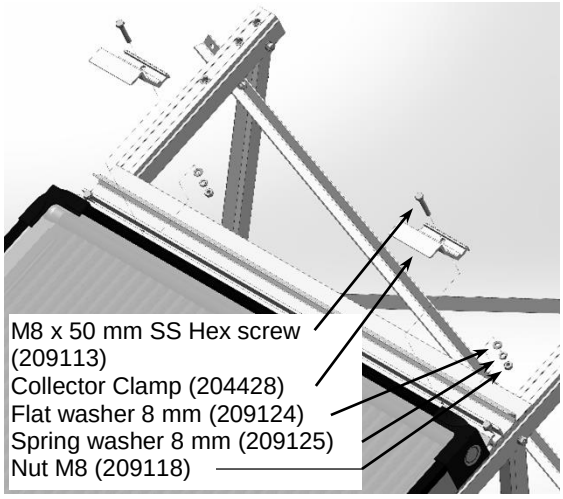

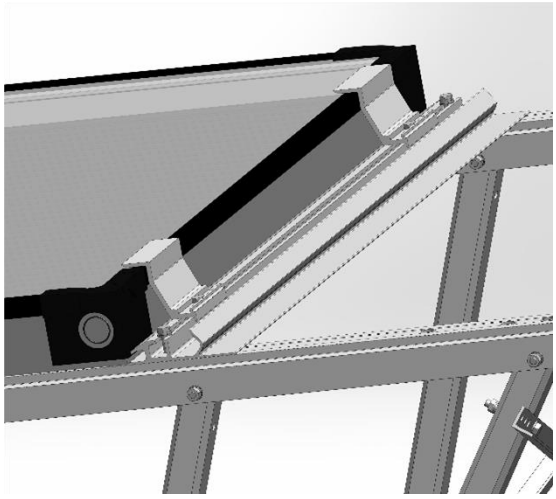

Folded Tray Collector Clamping – Tank / Collector Rail

INSTALLING THE SOLAR STORAGE TANK

There are three types of tank which can be installed on the frame. The installation method and components used are determined by the shape of the tank base / feet. The three types are:

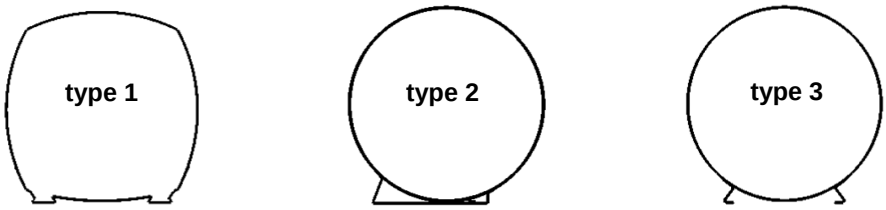

Solahart tanks Rheem 52C tanks Sunheat C tanks	Rheem 52L, 52H tanks	Rheem 52S tanks Sunheat D tanks

Note: If a system with folded-tray type collectors is being installed, prior to placing the solar storage tank on the frame, check the nut and bolt on each Collector Clamp on the Tank / Collector Rail has been tightened. Access to the nut may be difficult after the tank has been installed.

SOLAR STORAGE TANK WITH TWO FLAT FEET – TYPE 1

- Loosely secure the Tank Clamps (344121) to the Top Chords.
  - Separate the top and bottom sections of the Tank Clamps along the part line to obtain two pieces.
    - ➢ Place the smaller top piece over the larger bottom piece of the Tank Clamp, ensuring the serrated profiles fit together.
  - Using the end hole, centred 27 mm from the top end of the Top Chord, position a Tank Clamp over each Top Chord.
  - For each fixing, use:
    - ➢ one 30 mm screw (209114 - set screw hex M8 x 50 mm SS 304)
    - ➢ one 8 mm ID spring washer (209125 - washer spring 8 x 14.3 x 2 mm (G304)) under the screw head.
    - ➢ one 8 mm round washer (209124 - washer flat 8 mm (G304)) located between the spring washer and clamp.
  - Refer also to Detail V on page 43.
- Place the solar storage tank on the frame and centralise.
  - Ensure the lower foot of the solar storage tank is placed against the lip of the Tank / Collector Rail.
  - Ensure the higher foot of the solar storage tank is placed between the two lips of each Tank Clamp.

    The lip of the bottom half of each Tank Clamp must be hard up against and have engagement with the tank foot.

Separate top and bottom sections of Tank Clamps

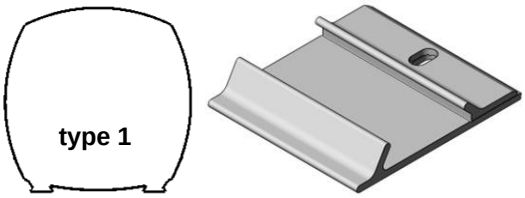

type 1 tank and Tank Clamp – 344121

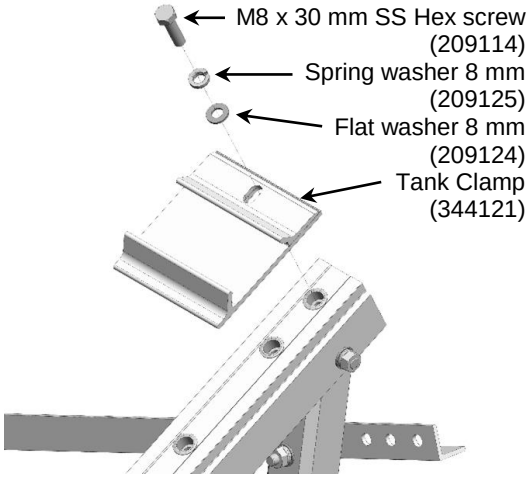

Fit Tank Clamps (for type 1 tank mounting)

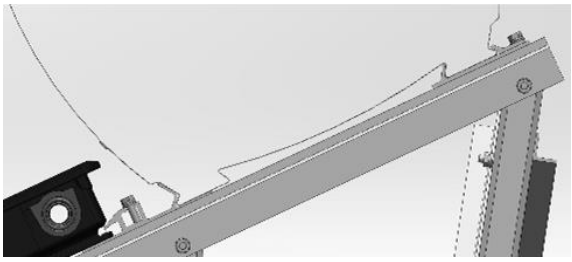

Tank type 1 positioned and secured

- Loosely secure the Tank Clamps. These will be tightened after the connecting solar pipes have been installed.
- Conduct a final alignment of the solar storage tank and solar collectors.

  Note: It is necessary to achieve correct alignment in order for the pipe work to fit up neatly.

- Connect the solar hot and solar cold pipes to the solar storage tank and collectors.

  Refer to the Installation instructions and Owner's Guide supplied with the water heater for details to complete the connections to the solar storage tank and collectors of the solar cold and hot pipe work.

- Tighten the nut and screw at each Collector Clamp and each Tank Clamp, using a spanner.

  The face of the inner lip of the upper half of each Tank Clamp is to be fully engaged against the tank foot.

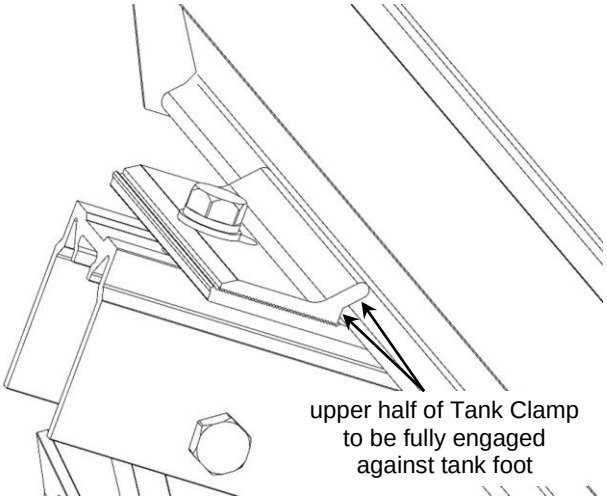

Tank Clamp position and engagement

- Check and securely tighten all other connections on the frame.
- Complete Part 2 – Frame installation of the Check List on page 47.

SOLAR STORAGE TANK WITH FLAT BASE – TYPE 2

- Fit the two Long Tank Straps (343060) to the Tank / Collector Rail and two Top Chords.

  Note: The Long Tank Straps (343060) are supplied in the Tank Frame Mounting Kit (PN 12103998 or PN 12103999).

  - Remove the screw and washer sets securing the Tank / Collector Rail to the two outside Top Chords.
  - Position the Long Tank Straps over the Tank / Collector Rail, one at each of these Top Chords, with the foot of the strap orientated outwards away from the tank position.
  - Fix the foot of each Long Tank Strap on top of the Tank / Collector Rail using:
    - one 50 mm screw (209113 - set screw hex M8 x 50 mm SS 304)
    - one 8 mm ID spring washer (209125 - washer spring 8 x 14.3 x 2 mm (G304)) under the screw head.
    - one 8 mm round washer (209124 - washer flat 8 mm (G304)) located under the spring washer and above the Long Tank Strap.

    Refer to the Detail X on page 44 and diagram 'Long Tank Strap to Tank / Collector Rail' on page 68.

  - Tighten the nuts and screws, using a spanner.

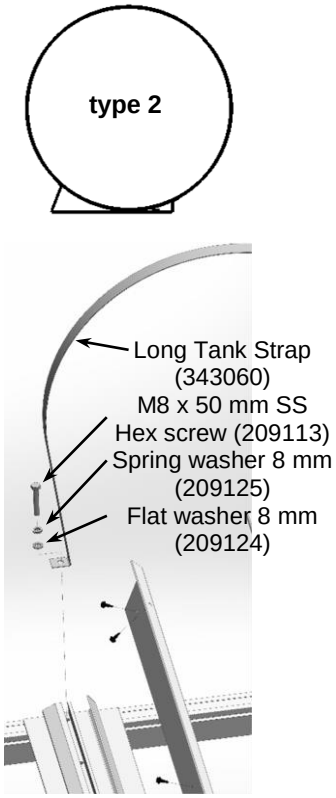

Tank Straps – frame mounting kits 12103998, 12103999

Note: Prior to placing the solar storage tank on the frame, it is necessary to attach the front Reinforcement Plate and rear Reinforcement Angle to the front and rear faces of the flat base of the tank. For the procedure of connecting the reinforcement plates, refer to the installation instructions (part number 347667) supplied with the 'Tank Frame Mounting Kit'. Refer also to diagram 'Long Tank Strap to Tank / Collector Rail' on page 68.

- Place the solar storage tank centrally on the frame, wrapping the Long Tank Straps over the tank.
- Ensure the front Reinforcement Plate is placed against the lip of the Tank / Collector Rail.
- Conduct a final alignment of the solar storage tank and solar collectors.

  Note: It is necessary to achieve correct alignment in order for the pipe work to fit up neatly.

- Connect the solar hot and solar cold pipes to the solar storage tank and collectors.

  Refer to the Installation instructions and Owner's Guide supplied with the water heater for details to complete the connections to the solar storage tank and collectors of the solar cold and hot pipe work.

- Tighten the nut and screw at each Collector Clamp, using a spanner, to secure the solar collector(s) after the solar hot and solar cold pipes are connected to the solar storage tank and solar collectors.

- Position the saddle shaped galvanised Tank Clamps (204660) supplied with the frame, one to each of the Top Chords.
  - The shorter angled face of each clamp is to be placed against the rear Reinforcement Angle of the solar storage tank.
  - The slotted hole in the longer angled face is to be over the hole at the top end of the Top Chord.

  Note: Discard the Tank Clamps (343207) supplied in the Tank Mounting Kit.

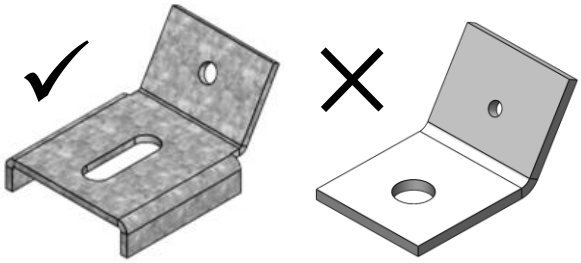

- Fix the Tank Clamp to the Reinforcement Angle with the Tek Screw 14 G x 20 TPI x 22 (080071) supplied with the frame.

  Note: Do not use the Tek Screws 10 G x 16 mm supplied in the Tank Mounting Kit for this purpose.

- Fix a Rear (Short) Tank Strap (343203) to each outside Tank Clamp and Chord.

  Note: The Rear (Short) Tank Straps (343203) are supplied in the Tank Frame Mounting Kit (PN 12103998 or PN 12103999).

  - Position the Rear (Short) Tank Straps over each of the outside Tank Clamps, with the foot of the bracket pointing inward toward the tank.
  - Fix each Rear (Short) Tank Strap on top of each Tank Clamp using:
    - one 30 mm screw (209114 - set screw hex M8 x 30 mm SS 304)
    - one 8 mm ID spring washer (209125 - washer spring 8 x 14.3 x 2 mm (G304)) under the screw head.
    - one 8 mm round washer (209124 - washer flat 8 mm (G304)) located between the spring washer and above the Rear (Short) Tank Strap.
  - Tighten the nut and screw at each Rear (Short) Tank Strap / Tank Clamp connection, using a spanner.

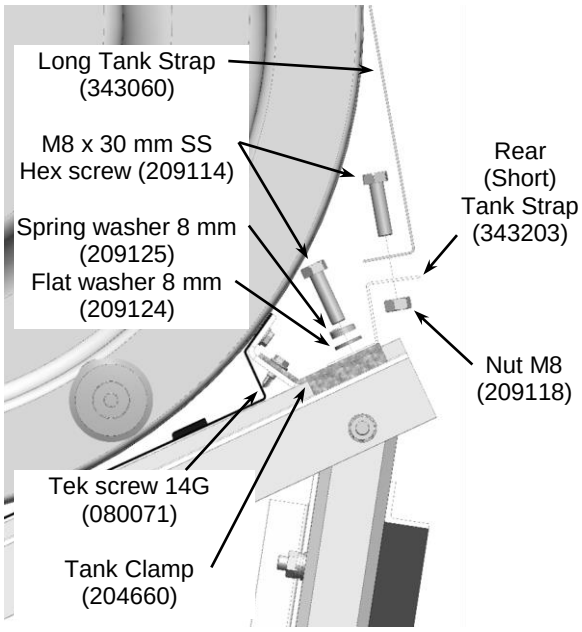

Rear (Short) Tank Strap

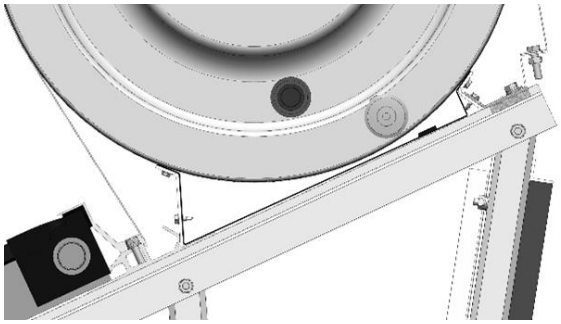

Tank type 2 positioned and secured

- Fix the foot of each Long Tank Strap to the upper foot of the Rear (Short) Tank Strap using a 30 mm screw (209114 - set screw hex M8 x 30 mm SS 304) and nut (209118 - nut M8 x 1.25 mm (G304)) provided with the frame.
  - Tighten the nut and screw at each join of the Tank Straps, using a spanner.

  Note: Do not use the screws or nuts supplied in the Tank Mounting Kit for this purpose.
- Check and securely tighten all other connections on the frame.
- Complete Part 2 – Frame installation of the Check List on page 47.

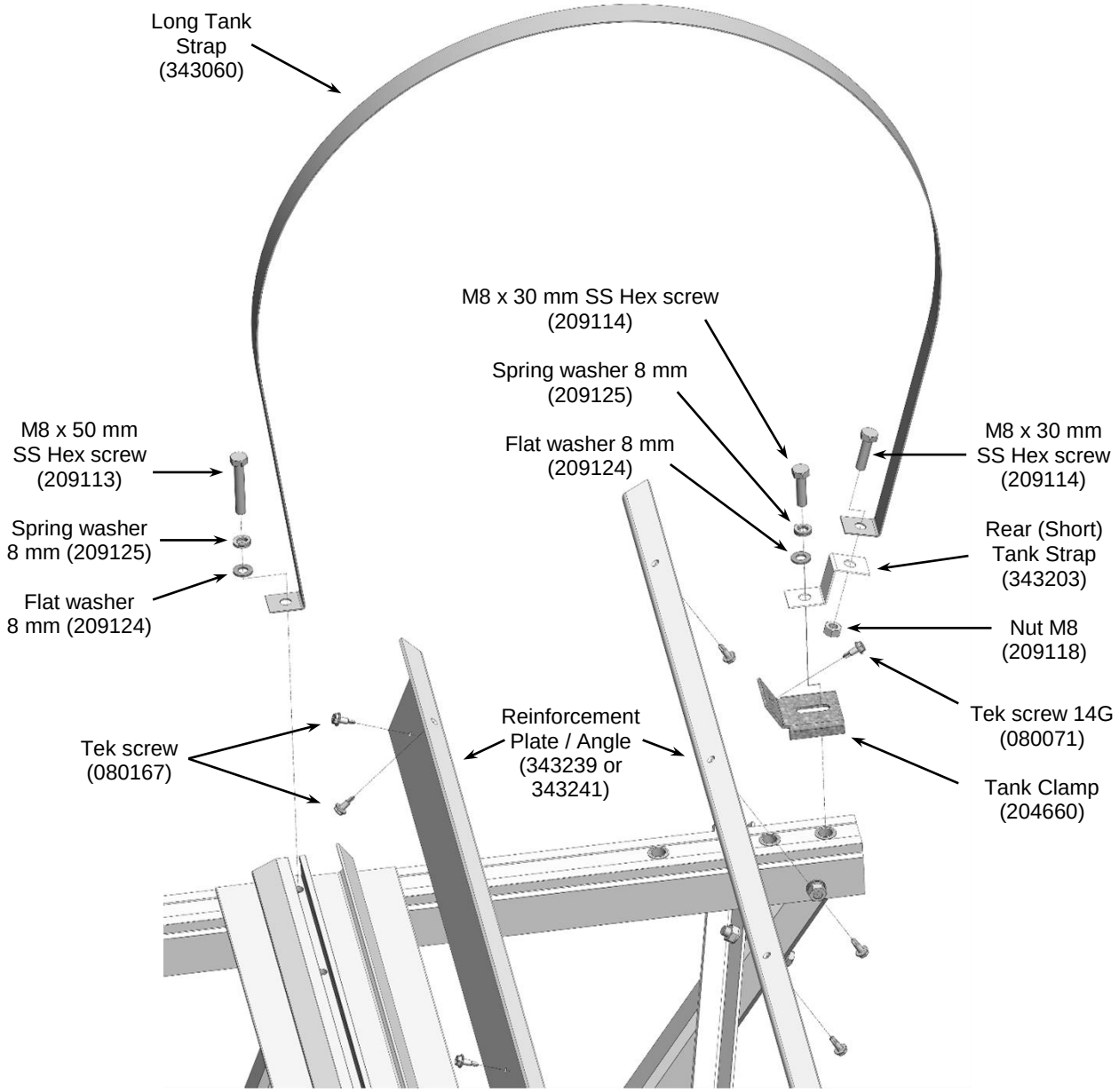

Long Tank Strap to Tank / Collector Rail (for type 2 tank mounting)

SOLAR STORAGE TANK WITH Z-SECTION FEET – TYPE 3

- Place the solar storage tank on the frame and centralise.
- Ensure the lower foot of the solar storage tank is placed against the lip of the Tank / Collector Rail.
- Conduct a final alignment of the solar storage tank and solar collectors.

  Note: It is necessary to achieve correct alignment in order for the pipe work to fit up neatly.

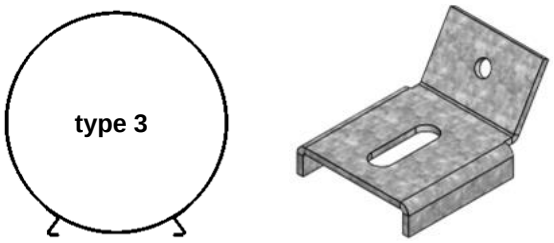

Tank Clamp – 204660

- Connect the solar hot and solar cold pipes to the solar storage tank and collectors.

  Refer to the Installation instructions and Owner's Guide supplied with the water heater for details to complete the connections to the solar storage tank and collectors of the solar cold and hot pipe work.

- Tighten the nut and screw at each Collector Clamp, using a spanner, to secure the solar collector(s) after the solar hot and solar cold pipes are connected to the solar storage tank and solar collectors.

- Position the saddle shaped galvanised Tank Clamps (204660) supplied, one to each of the Top Chords, with the shorter angled face of each clamp against the Z-section foot.
  - The slotted hole in the longer angled face is to be over the hole at the top end of the Top Chord.
- Fix each Tank Clamp to the Z-section foot with a Tek Screw 14 G x 20 TPI x 22 (080071) supplied.
- Fix the Tank Clamp to the Top Chord using:
  - one 30 mm screw (209114 - set screw hex M8 x 30 mm SS 304)
  - one 8 mm ID spring washer (209125 - washer spring 8 x 14.3 x 2 mm (G304)) under the screw head.
  - one 8 mm round washer (209124 - washer flat 8 mm (G304)) between the spring washer and Tank Clamp.
  - Refer also to Detail V on page 43.
  - Tighten the nut and screw at each Tank Clamp, using a spanner.
- Check and securely tighten all other connections on the frame.
- Complete Part 2 – Frame installation of the Check List on page 47.

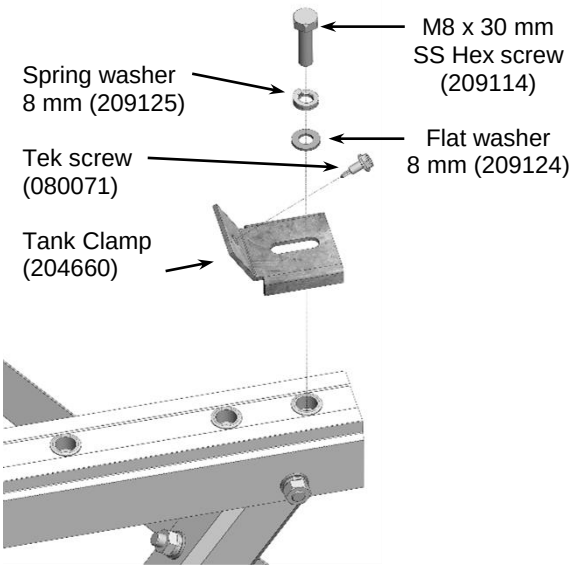

Tank Clamp and fixings

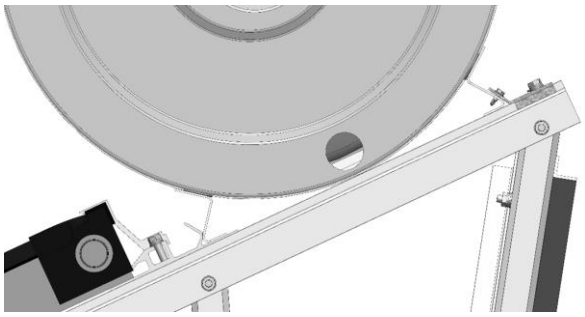

Tank type 3 positioned and secured

SYSTEM CERTIFICATIONS

The structural engineering analysis and design of this Variable-Pitch frame has been conducted and certified by a certified structural engineer.

The design is in accordance with normal engineering practice and principles and the relevant sections of the following Australian Standards:

- AS / NZS 1170.0:2002 Structural design actions – Part 0: General principles (including Amendments 1, 2, 3, 4, 5)
- AS / NZS 1170.1:2002 Structural design actions – Part 1: Permanent, imposed and other actions (including Amendments 1, 2)
- AS / NZS 1170.2:2011 Structural design actions – Part 2: Wind actions (including Amendments 1, 2, 3)
- AS / NZS 4600:2005 Cold-formed steel structures (including Amendment 1)
- AS / NZS 1664.1:1997 Aluminium structures Part 1: Limit design state (including Amendment 1)
- AS 1720.1-2010 Timber structures Part 1: Design methods (including Amendments 1, 2, 3)

To achieve the structural design capacity, it is essential this Variable-Pitch frame be assembled in strict accordance with the fixing details as outlined in these installation instructions.

The design of this frame does not consider the effects of any snow or earthquake loading.

This page is intentionally blank.