PV-ezRACK®

SolarRoof Penetrative Flush and Tilt with EliteRail

Code-Compliant Planning and Installation Guide V1.0
Complying with AS/NZS1170.2:2021

SOLAR ROOF

Last Updated - Oct. 2023

Introduction

The Clenergy PVezRack® SolarRoof™ has been developed as a universal PV-mounting system for roof-mounting on pitched and flat roofs. The use of patented aluminium base rails, Z-Module technology and telescopic mounting technology eliminates custom cutting and enables fast installation.

Please review this manual thoroughly before installing PVezRack® SolarRoof™. This manual provides:

1) Supporting documentation for building permit applications relating to PVezRack® SolarRoof™ Universal PV Module Mounting System,

2) Planning and installation instructions.

List of contents

The PVezRack® SolarRoof™ parts, when installed in accordance with this guide, will be structurally sound and will meet the AS/NZS1170.2:2021 standard. During installation, and especially when working on the roof, please comply with the appropriate Occupational Health and Safety regulations. Please also pay attention to any other relevant State or Federal regulations. Please check that you are using the latest version of the Installation Manual, which you can do by contacting Clenergy Australia via email on tech@clenergy.com.au, or contacting your local distributor in Australia.

Product Warranty:
Please refer PVezRack® Product Warranty on our website.

The installer is solely responsible for:

- Complying with all applicable local or national building codes, including any updates that may supersede this manual;
- Ensuring that PVezRack® and other products are appropriate for the particular installation and the installation environment;
- Using only PVezRack® parts and installer-supplied parts as specified by PVezRack® project plan (substitution of parts may void the warranty and invalidate the letter of certification);
- Recycling: Recycle according to the local relative statute;
- Removal: Reverse installation process;
- Ensuring that there are no less than two professionals working on panel installation;
- Ensuring the installation of related electrical equipment is performed by licenced electricians;
- Ensuring safe installation of all electrical aspects of the PV array, This includes adequate earth bonding of the PV array and PVezRack® SolarRoof components as required in AS/NZS 5033: 2021.
- Ensuring that the roof, its rafters/purlins, connections, and other structural support members can support the array under building live load conditions;
- Ensuring that screws to fix interfaces have adequate pullout strength and shear capacities as installed;
- Maintaining the waterproof integrity of the roof, including selection of appropriate flashing;
- Verifying the compatibility of the installation considering preventing electrochemical corrosion between dissimilar metals. This may occur between structures and the building and also between structures, fasteners and PV modules, as detailed in AS/NZS 5033: 2021.
- Verifying atmospheric corrosivity zone of installation site by referring to AS 4312-2008 or consulting local construction business to determine appropriate products and installations.

Planning

Determine the wind region of your installation site

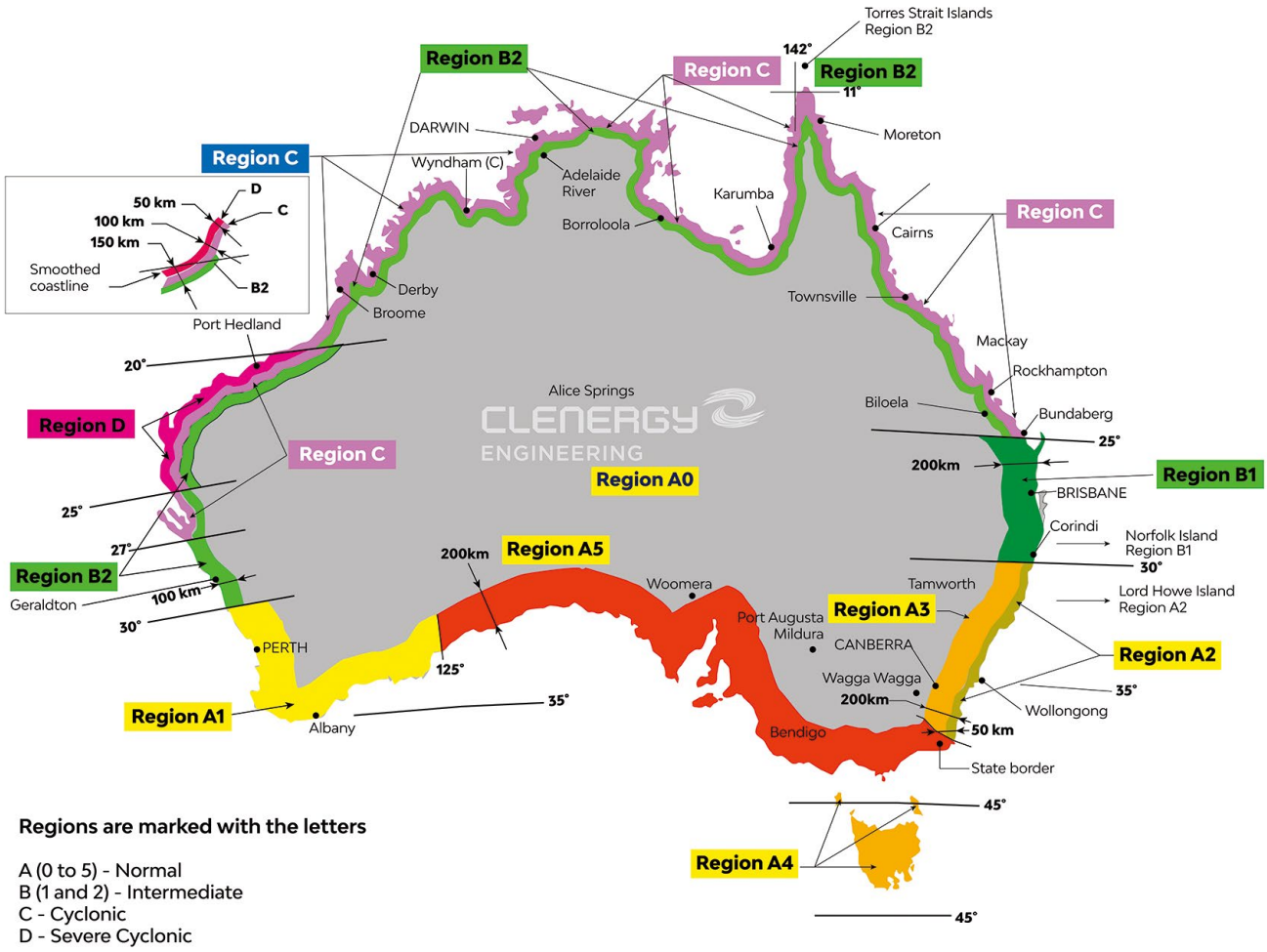

Wind Regions – Australia

Wind regions are pre-defined for the whole of Australia by the Australian Standard 1170.2:2021. Comparing to 1170.2:2011, 2021 version has a lot of changes in wind regions.

- Central Australia is now classified as Wind Region A0 and Terrain Classification 2 instead of Wind Region A4.
- Region A1, previously most of the South coast of Australia, now is divided into Regions A1 and A5.
- Tasmania is now Region A4.
- Region B has been divided into regions B1 and B2. This will affect installations in Northern NSW, Gold Coast, Brisbane, Sunshine Coast, and Gladstone.
- Region B1 was increased to include more inland cities around Brisbane. This will likely mean extra structural requirements such as extra rail for installs.

Determine the Terrain Category

It requires to determine the right terrain category to ensure the installation meets the maximum interface spacing specified in the engineering certificate.

In 1170.2-2021, Terrain category 1.5 was removed and Terrain category 2.5 was added. See the definitions below.

Terrain Category 1 (TC1) – Very exposed open terrain with very few or no obstructions, and all water surfaces (e.g. flat, treeless, poorly grassed plains; open ocean, rivers, canals, bays and lakes).

Terrain Category 2 (TC2) – Open terrain, including grassland, with well-scattered obstructions having heights generally from 1.5 m to 5 m, with no more than two obstructions per hectare (e.g. farmland and cleared subdivisions with isolated trees and uncut grass).

Terrain Category 2.5 (TC2.5) – Terrain with some trees or isolated obstructions, terrain in developing outer urban areas with scattered houses, or larger acreage developments with more than two and less then 10 buildings per hectare.

Terrain Category 3 (TC3) – Terrain with numerous closely spaced obstructions having heights generally from 3 m to 10 m. The minimum density of obstructions shall be at least the equivalent of 10 house-size obstructions per hectare (e.g. suburban housing, light industrial estates or dense forests).

Terrain Category 4 (TC4) – Terrain with numerous large, high (10 m to 30 m tall) and closely spaced constructions, such as large city centres and well-developed industrial complexes.

If your installation site is not at TC 2, 2.5 or 3, please contact Clenergy to obtain a project specific engineering certificate to support your installation.

Verify Atmospheric Corrosivity Zone of Installation Site

Please refer to "AS 4312-2008 Atmospheric Corrosivity Zones in Australia" or consult local construction business to verify corrosivity category of installation site to determine appropriate products and interface spacing. When standard products are installed in high corrosivity zones, like C4/C5, interface spacing reduction factor need to be applied. Please refer to the generic notes of Certification Letter for the details

Determine the Installation Area of Roof

For flush mount system, there are 3 conditions below to determine 2 roof zones (upwind & downwind and central) installation area of Roof. Please refer to "Tin and Tile Flush Mount Certificate" for details.

- Roof pitch to be between 1' and 30°
- h/d < 0.5 and h/b < 0.5. Being h= height, b= width and d= length of the building as per thebelow picture.
- Gap between the underside of the panel and the roof to be no less than 50 mm and no morethan 300 mm

There is an Exclusion Zone for flush installation, which is the minimum distance between PV solar panel and roof edge of "2s", where "s" is the gap between the underside of the panel and the roof surface.

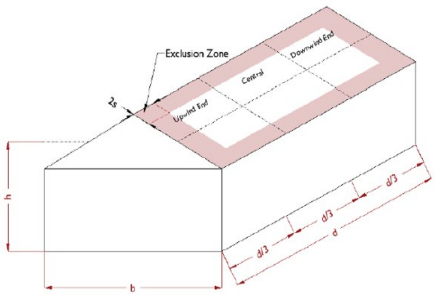

If any of the conditions above is not met, installation area of roof for flush system falls into 4 zones (internal, intermediate, edge and corner) installation. Please refer to "Tin Flush and Tilt Mount Certificate" for details.

For tilt mount system, installation area of roof always falls into 4 zones. Please refer to "Tin Flush and Tilt Mount Certificate" for details.

Determine Roof slope and Tilt Leg Angle

The PVezRack® SolarRoof Flush system can be used for roof slopes up to 30°. Please verify that the Installation site roof slope is between 0° and 30°.

The PVezRack® SolarRoof Tilt Legs system is suitable for roof slope up to 22° for rails running perpendicular to the roof slope (including standard and reverse tilt), and up to 10° for rails running parallel to the roof slope. See the diagrams of 3 different scenarios below.

Please always keep back leg tilt within 30° - 90° from roof plane or horizontal depending on certain scenario.

Standard Tilt – Rails perpendicular to Roof Slope

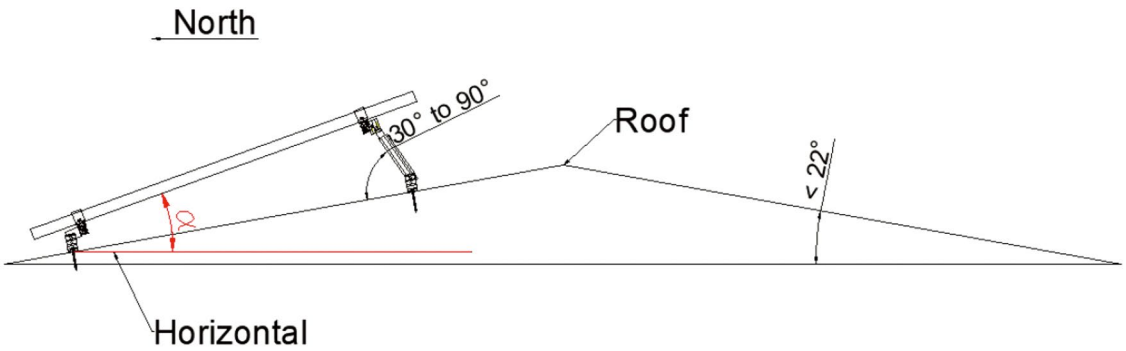

Reverse Tilt – Rails perpendicular to Roof Slope

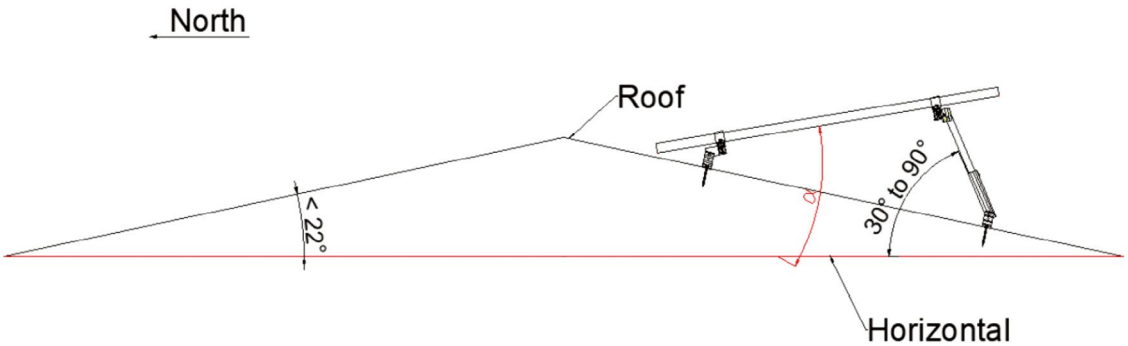

Standard Tilt – Rails parallel to Roof Slope

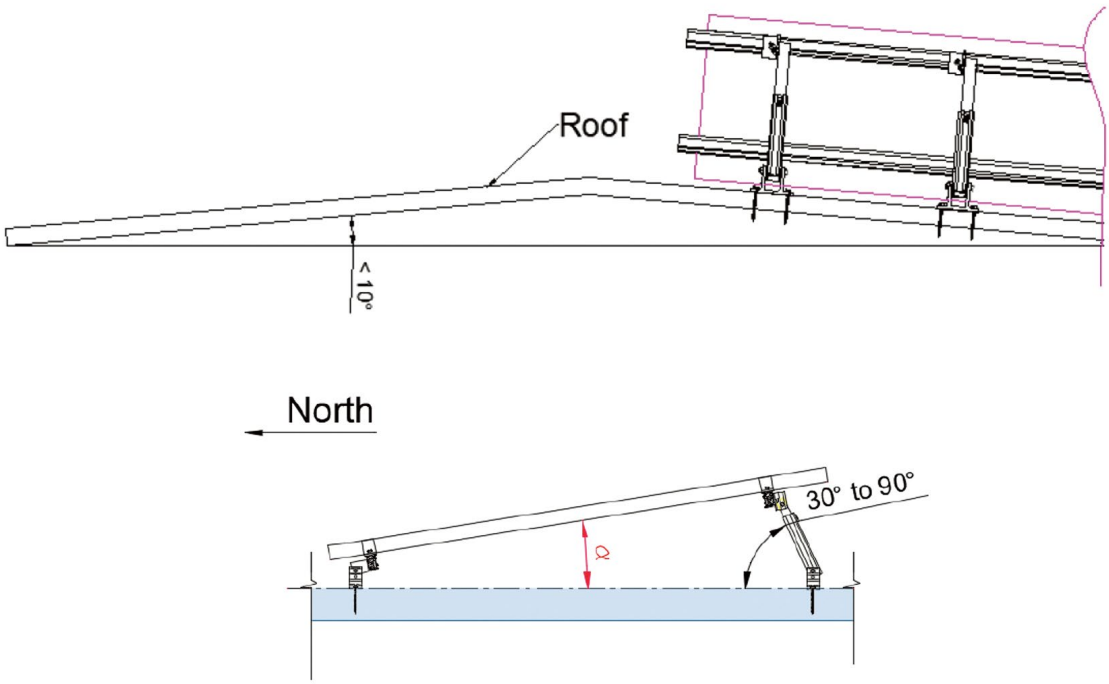

Verify Rafter/Purlin Properties of Building

Please verify rafter/purlin properties of building, which could affect the interface spacing. For example, tin interface spacing on the metal purlin in the certification letter is based on steel purlin G450 1.5 mm thick. If the steel purlin is less than 1.5 mm thick, the corresponding reduction factor of interface spacing will be applied. Please refer generic notes for details.

Determine Two Screws or One Screw Installations of Tilt Legs

There are options of using two screws or one screw for installations of adjustable and fixed tilt legs, depending on the project scenario, such as required interface spacing, purlin spacing, rib spacing of roof sheet and so on. Please find a note of engineering letter for details.

Determine the Maximum Rail Support Spacing

Please refer to the Certification Letter and Interface Spacing Table. If a project specific Certification Letter has been provided, please refer to the support spacing in this letter.

Verify Maximum Rail End Overhang

Rail end overhang should be not over 40% of the interface spacing. For example, if the interface spacing is 1500mm, the Rail end overhang can be up to 600mm only.

Acquire PV Modules Clamping Zone Information

It is recommended to acquire PV modules clamping zone info. from PV modules manufacturer, which can help to plan interfaces positions on the roof and rails orientation and positions.

The application of Adjustable Tilt Legs

Following the tilt angle rules of on the north or south facing roof, the actual panel tilt angles using the adjustable tilt legs installed at the different purlin spacing could be applicable or not. Please see the table and side view diagrams below.

Application of Adjustable Tilt Legs																
Purlin spacing		1200 mm					1400 mm					1700 mm				
	Product	10°	15°	30°	45°	60°	10°	15°	30°	45°	60°	10°	15°	30°	45°	60°
1650 mm panel in portrait	ER-TL-10/15	√ (1)	√ (2)	×	×	×	√ (6)	×	×	×	×	×	×	×	×	×
	ER-TL-15/30	×	×	×	×	×	×	√ (8)	×	×	×	×	×	×	×	×
	ER-TL-30/60	×	×	√ (3)	√ (4)	×	×	×	√ (10)	√ (12)	×	×	×	√ (14)	×	×
1960 mm panel in portrait	ER-TL-10/15	×	×	×	×	×	√ (7)	×	×	×	×	×	×	×	×	×
	ER-TL-15/30	×	×	×	×	×	×	√ (9)	×	×	×	×	×	×	×	×
	ER-TL-30/60	×	×	×	√ (5)	×	×	×	√ (11)	√ (13)	×	×	×	√ (15)	×	×

Note: √ indicates applicable; × indicates not applicable

(1)

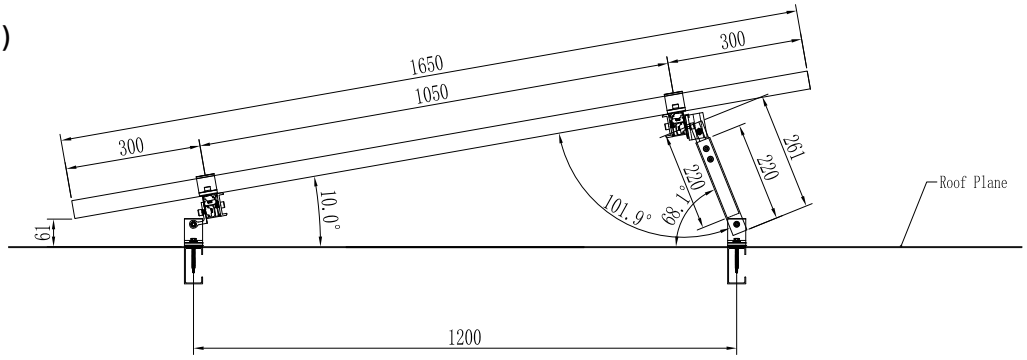
1650
1050
300
300
361
220
220
101.9°
68.1°
10.0°
61
Roof Plane
1200

(2)

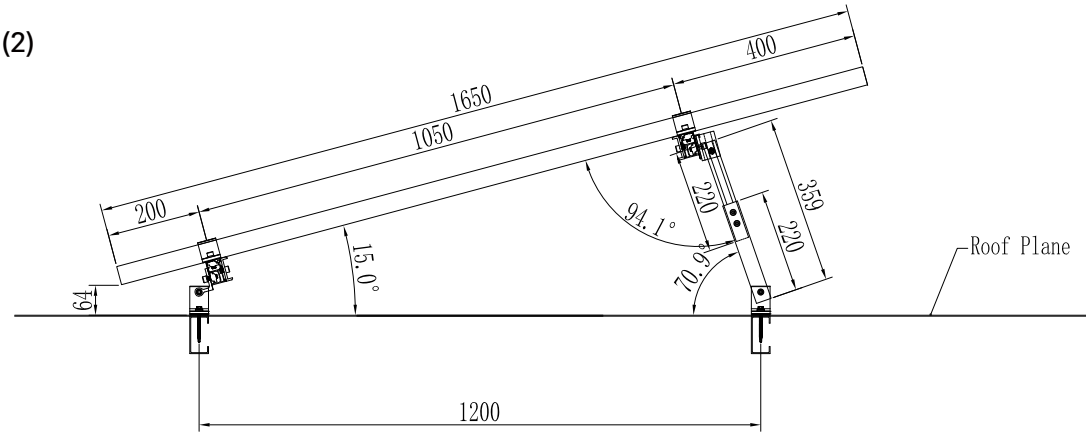
400
1650
1050
200
359
220
220
94.1°
70.9°
15.0°
64
Roof Plane
1200

(3)

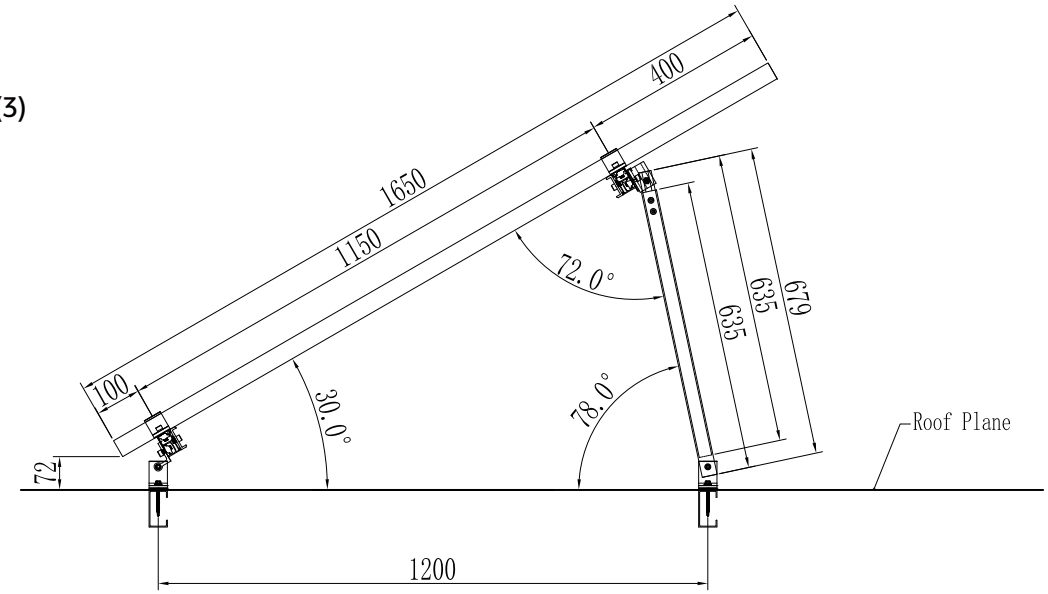
400
1650
1150
72.0°
679
635
635
100
30.0°
78.0°
72
Roof Plane
1200

(4)

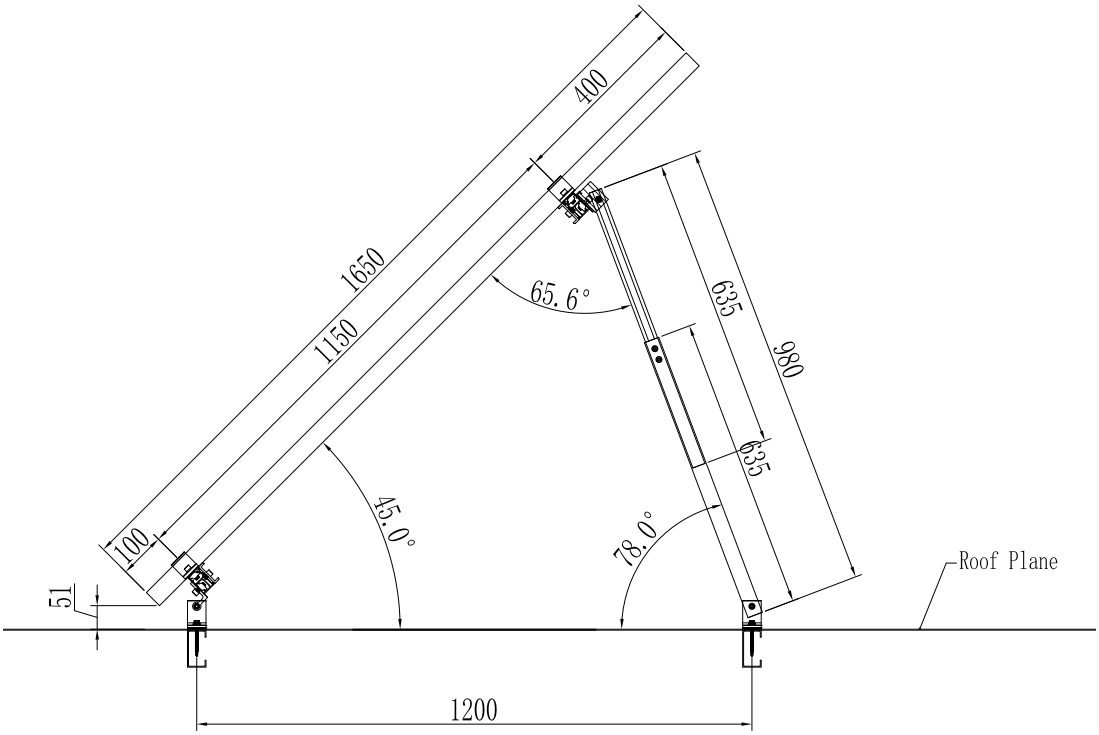
400
1650
1150
65.6°
635
980
635
45.0°
78.0°
100
51
Roof Plane
1200

(5)

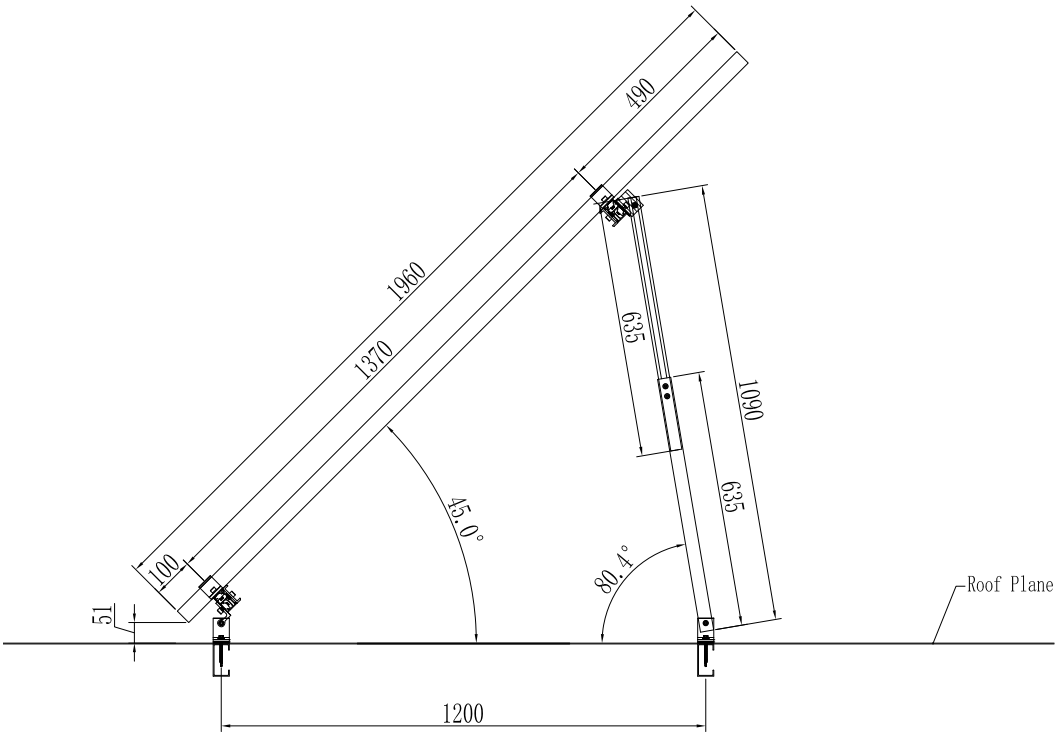
490
1960
1370
635
1090
635
45.0°
80.4°
100
51
Roof Plane
1200

(6)

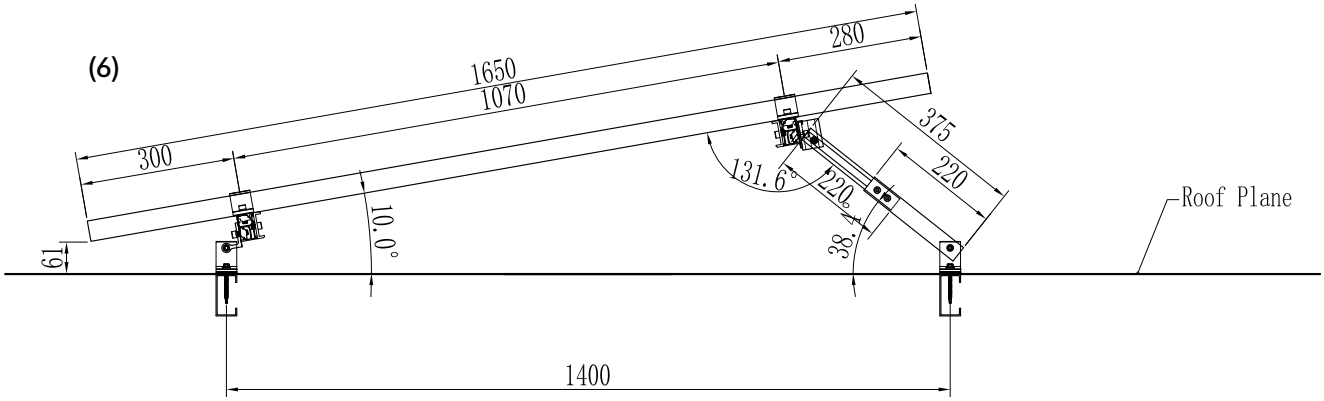
1650
1070
280
300
375
220
131.6°
220
38.4°
10.0°
61
Roof Plane
1400

(7)

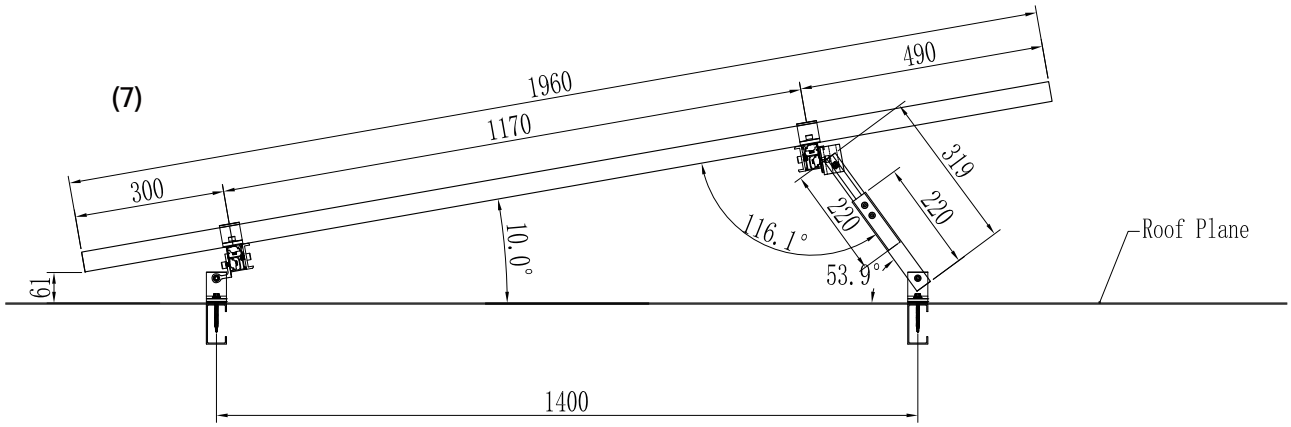
1960
1170
490
300
319
220
220
116.1°
53.9°
10.0°
61
Roof Plane
1400

(8)

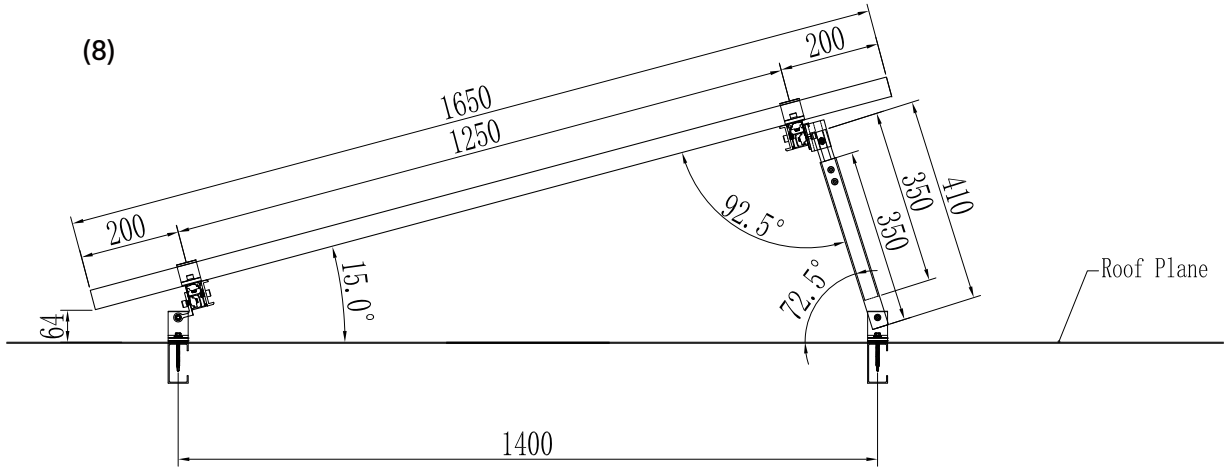
1650
1250
200
200
350
410
350
92.5°
72.5°
15.0°
64
Roof Plane
1400

(9)

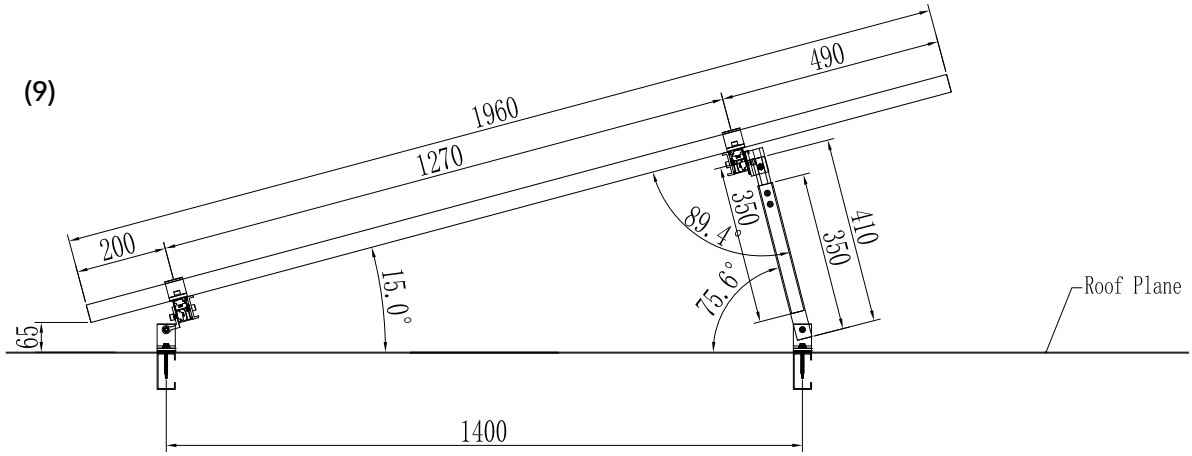
490
1960
1270
200
89.4°
350
410
350
15.0°
75.6°
65
Roof Plane
1400

(10)

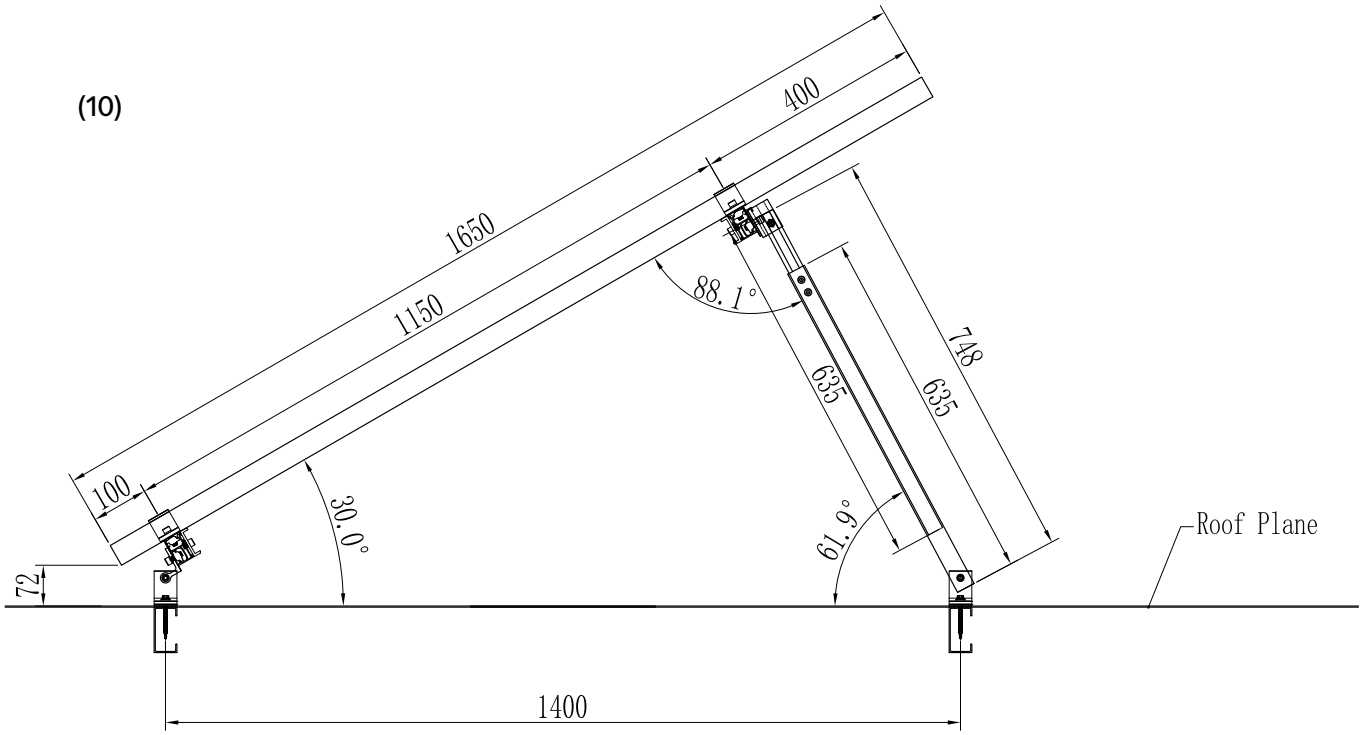
400
1650
1150
88.1°
748
635
635
100
30.0°
61.9°
72
Roof Plane
1400

(11)

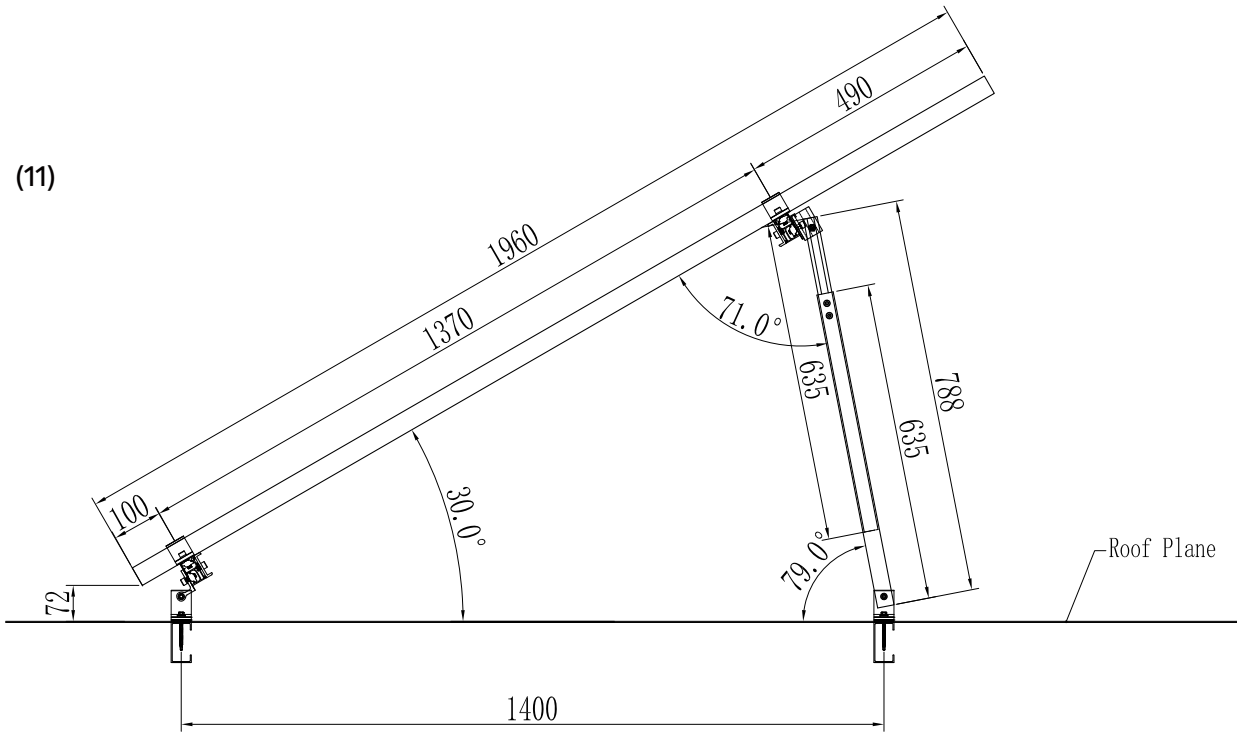
490
1960
1370
71.0°
635
788
635
30.0°
100
79.0°
72
Roof Plane
1400

(12)

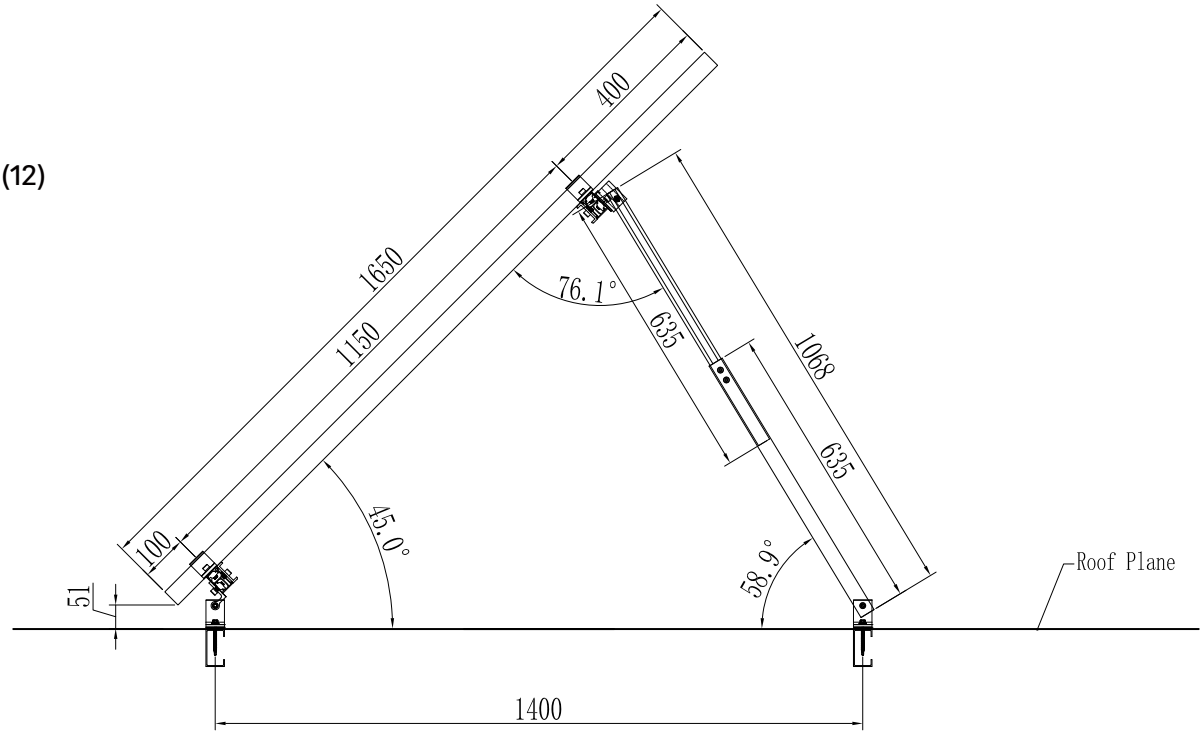
400
1650
76.1°
1150
635
1068
635
45.0°
100
58.9°
51
Roof Plane
1400

(13)

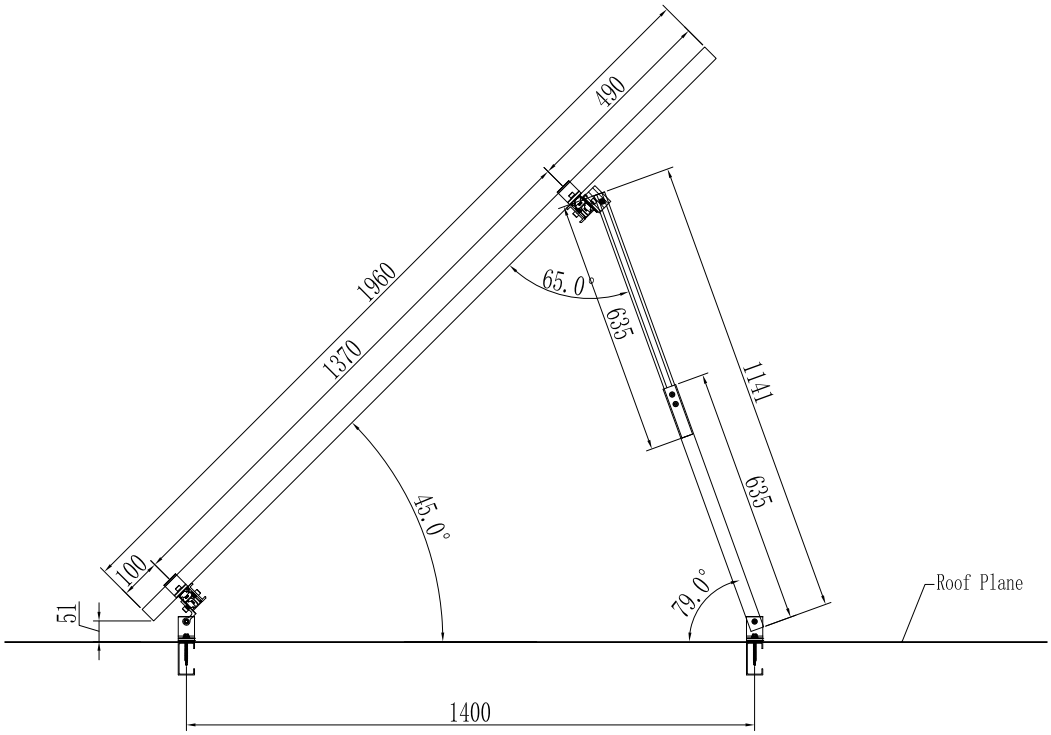
490
1960
1370
65.0°
635
1141
635
45.0°
100
51
79.0°
Roof Plane
1400

(14)

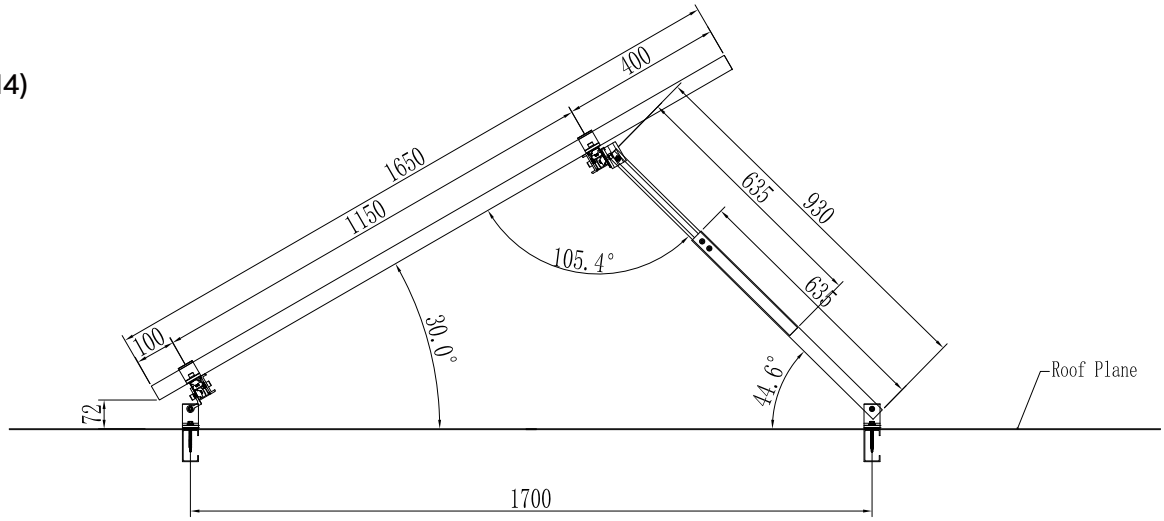
400
1650
1150
635
930
105.4°
635
30.0°
100
44.6°
Roof Plane
72
1700

(15)

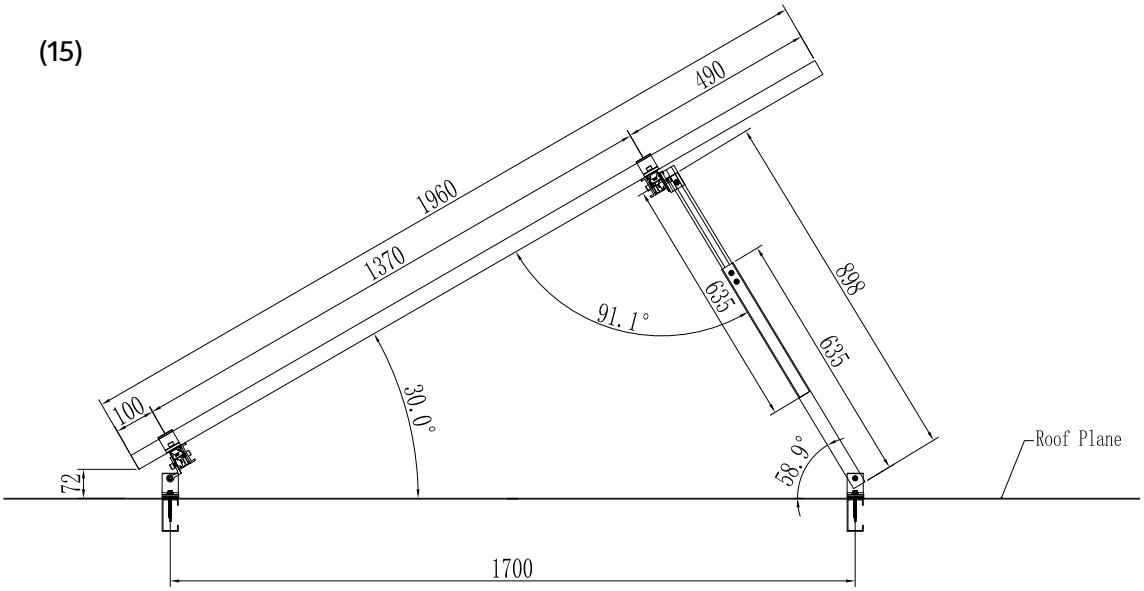

Tools and Components

Tools

				
Angle Grinder with Stone Disk	Drill Driver (for M8 Hexagon Socket Screw)	Torque Spanner	Tape Measure	String & Marker Pen
				
Spanner				

Components

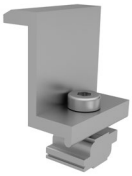	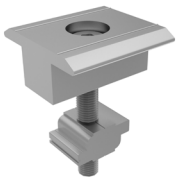			
ER-EC-ST End Clamp	ER-IC-ST Inter Clamp	C-U/30/46-G Akashi Clamp with grounding clip	C-U/30/46 Akashi Clamp	ER-EC-DU35/40 End Clamp, Dual 35 or 40mm
	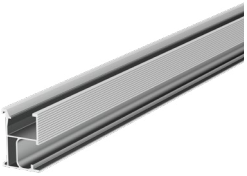			
ER-EC-DU40/46 End Clamp, Dual 40 or 46mm	ER-R-ELT Elite Rail	ER-SP-ECO Splice for ECO-Rail		

Flush mount component

				
ER-I-41/EZC/ECO Adjustable Tile Interface with ezClick connection, 120 mm horizontal arm	**ER-I-61/EZC/ECO** Adjustable Tile Interface with ezClick connection, 170 mm horizontal arm	**ER-I-01** Tile Interface	**ER-I-01/CS** Tile Interface, Carbon Steel	**ER-I-01/EZC/ECO** Tile Interface with ezClick connection for ECO-Rail
				
ER-I-02 Flat Tile Interface	**ER-I-04** Slate Interface	**ER-I-23** Tile Interface -Landscape	**ER-I-26** Tile Interface -Side mount	**ER-I-51** Tile Interface, 118mm horizontal arm
				
ER-I-71 Tile Interface, 190 mm horizontal arm	**ER-I-05** Tin Interface	**ER-I-05/CM** Tin Interface with Click Module	**ER-I-05A/EZC/ECO** Tin Interface A with ezClick connection	**ER-I-25** Tin Interface with Curved Base for Corrugated Roof
			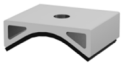	
ER-HB-8/150 Hanger Bolt for wood purlin	**ER-HB-MP/8/150EP** Hanger Bolt for metal purlin	**EZ-RE-200** Roof Hook Extender	**EZ-AD-C43** Adapter (Puck) for Corrugated Iron Roof	

Tilt mount component

			
ER-TL-10/15 ER-TL-15/30 ER-TL-30/60 Adjustable Tilt legs, non-preassembly	ER-TL-10/15/PS ER-TL-15/30/PS Adjustable Tilt legs, preassembly	TL-10/15/L/PS TL-15/30/L/PS Adjustable Tilt Legs with L-feet, preassembly	ER-TL-5/PS ER-TL-10/PS Fixed Tilt Legs, preassembly

System Overview

Overview of PVezRack® SolarRoof

Tile Interface

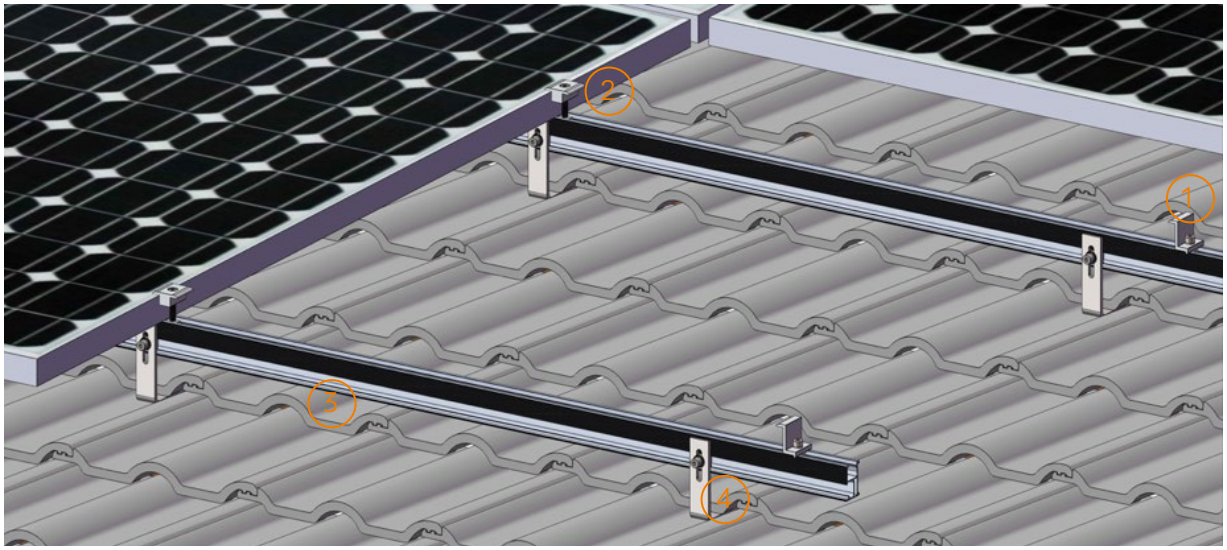

1. End Clamp 2. Inter Clamp 3. Elite Rail 4. Tile interface

Tin Interface

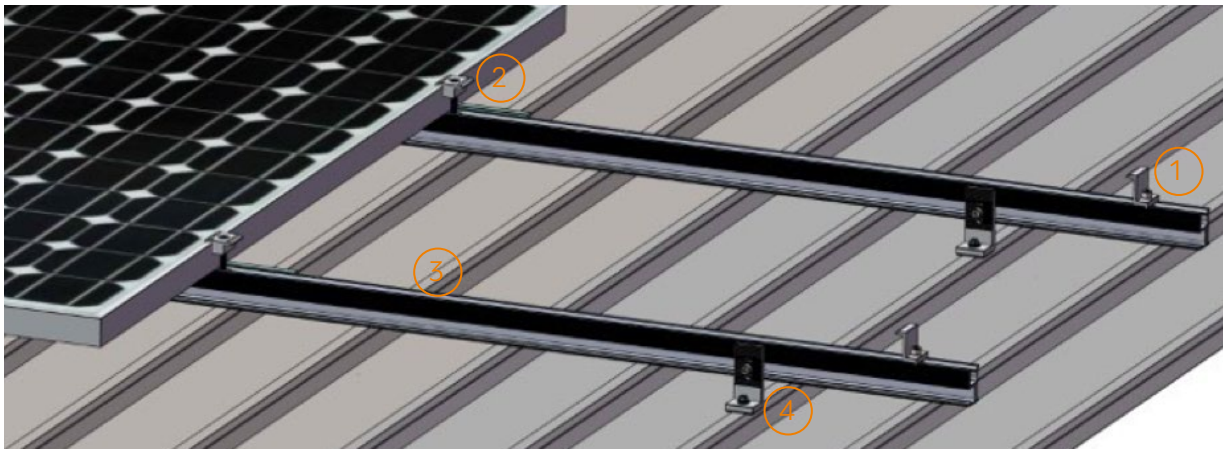

1. End Clamp 2. Inter Clamp 3. Elite Rail 4. Tin interface

Adjustable Tilt Legs

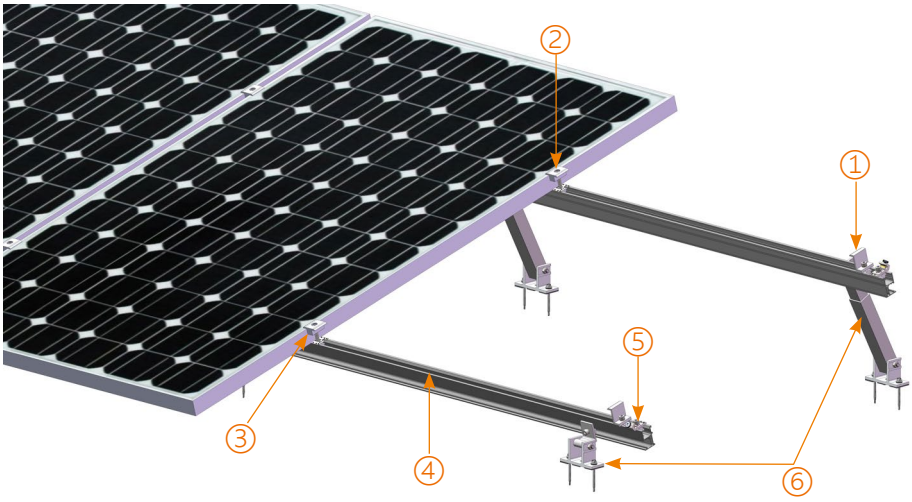

1. End Clamp 2. Inter Clamp 3. Grounding Clip 4. Elite Rail 5. Grounding Lug 6. Adjustable Tilt Legs

Adjustable Tilt Legs with L-feet

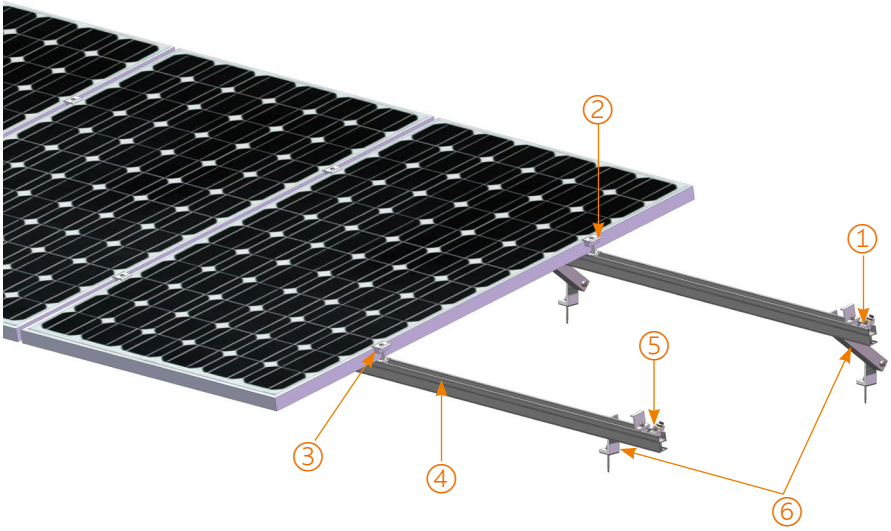

1. End Clamp 2. Inter Clamp 3. Grounding Clip 4. Elite Rail 5. Grounding Lug 6. Adjustable Tilt Legs with L-feet

Fixed Tilt Legs

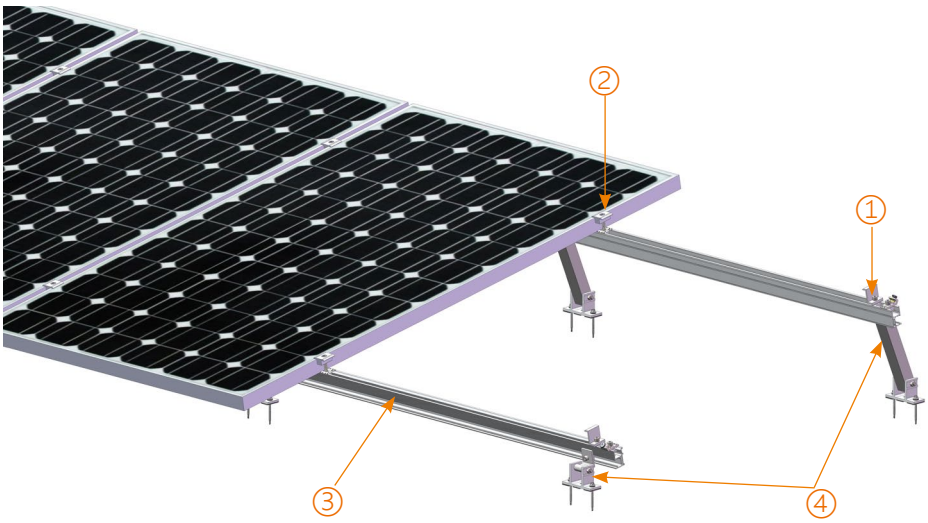

1. End Clamp 2. Inter Clamp 3. Elite Rail 4. Fixed Tilt Legs

Precautions during Stainless Steel Fastener Installation

Improper operation may lead to deadlock of Nuts and Bolts. The steps below should be applied to stainless steel nut and bolt assembly to reduce this risk.

General installation instructions:

(1) Apply force to fasteners in the direction of thread
(2) Apply force uniformly, to maintain the required torque
(3) Professional tools and tool belts are recommended
(4) In some cases, fasteners could be seized over time. As an option, if want to avoid galling or seizing of thread, apply lubricant (grease or 40# engine oil) to fasteners prior to tightening.

Safe Torques

Please refer to safe torques defined in this guide as shown in the figure below. If power tools are required, Clenergy recommends the use of low speed only. High speed and impact drivers increase the risk of bolt galling (deadlock). If deadlock occurs and you need to cut fasteners, please make sure that there is no load on the fastener before you cut it. Avoid damaging the anodized or galvanized surfaces.

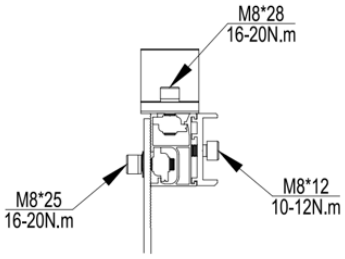

ER-I-01 and other tile interfaces

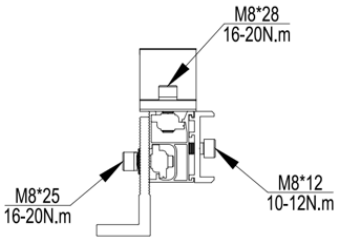

ER-I-05 and ER-I-25

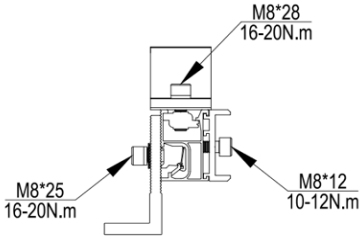

ER-I-05/CM

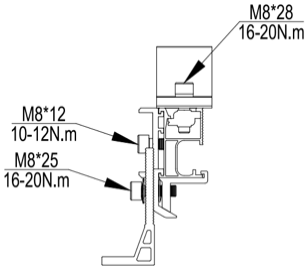

ER-I-05A/EZC/ECO

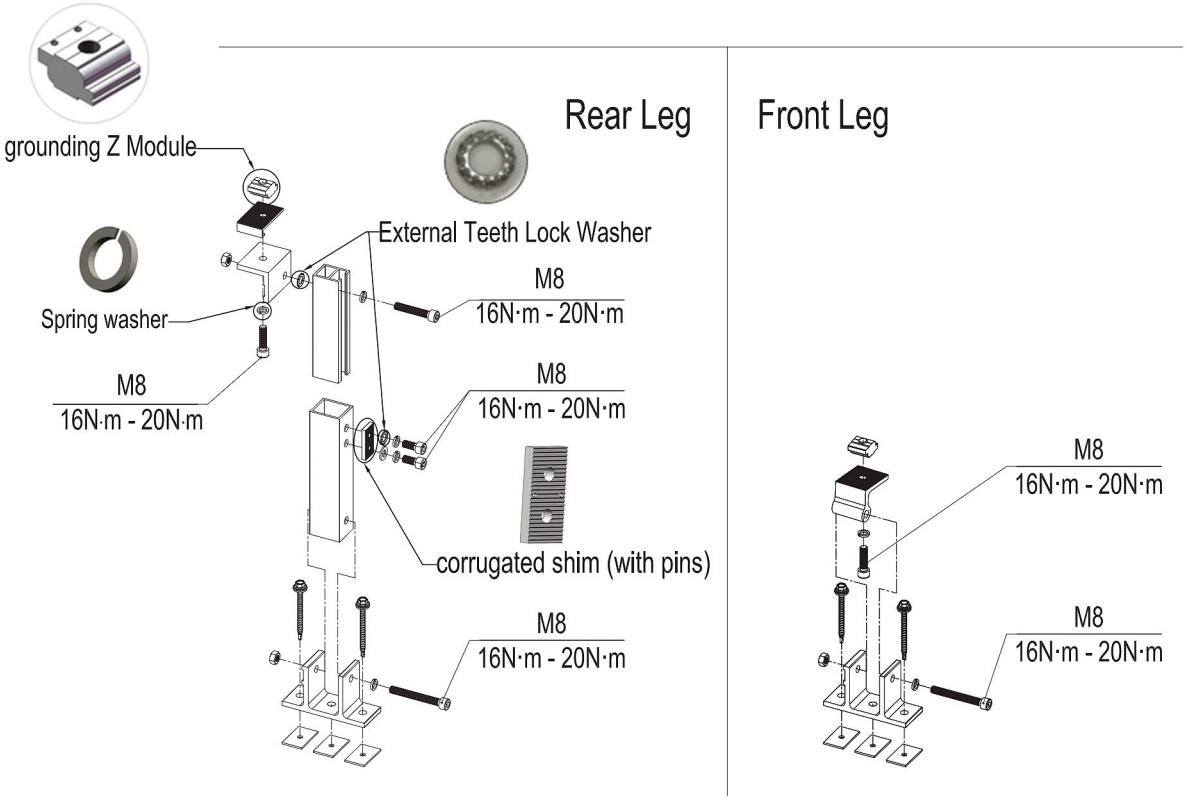

Note:
Grounding Z Module, External Teeth Lock Washers, Spring washer and corrugated shim (with pins) on the diagram above are to create the electrical continuity between rail and rear leg tubes.

2) Adjustable Tilt Legs with L-feet

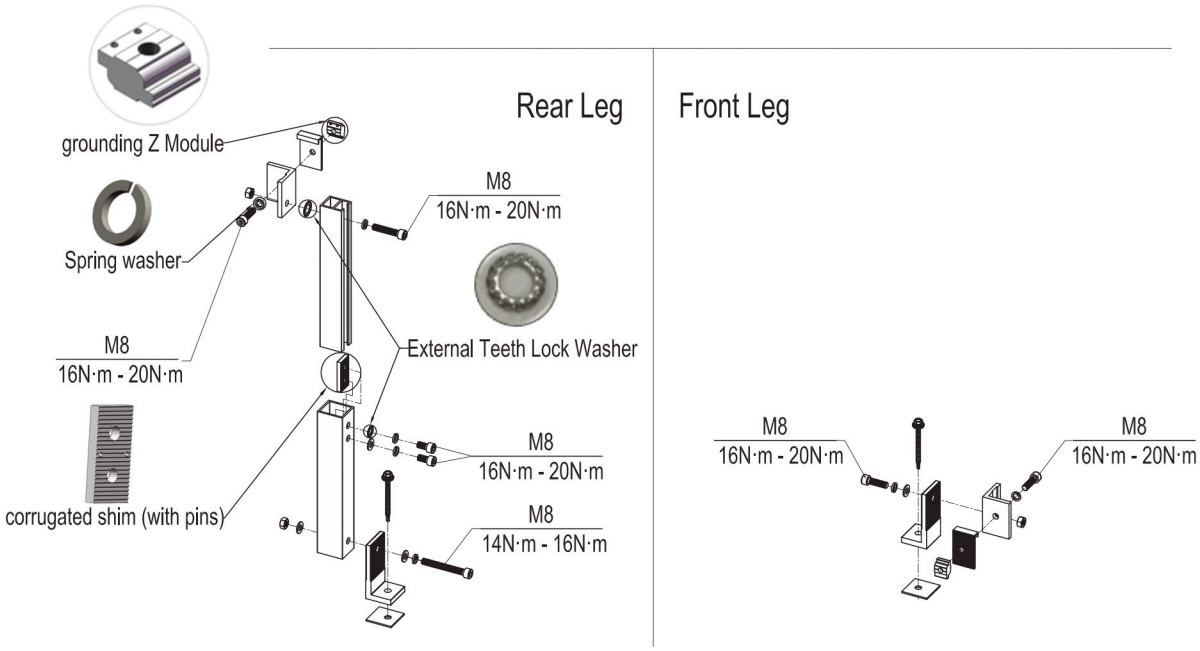

Note:
Grounding Z Module, External Teeth Lock Washers, Spring washer and corrugated shim (with pins) on the diagram above are to create the electrical continuity between rail and rear leg tubes.

3) Fixed Tilt Legs

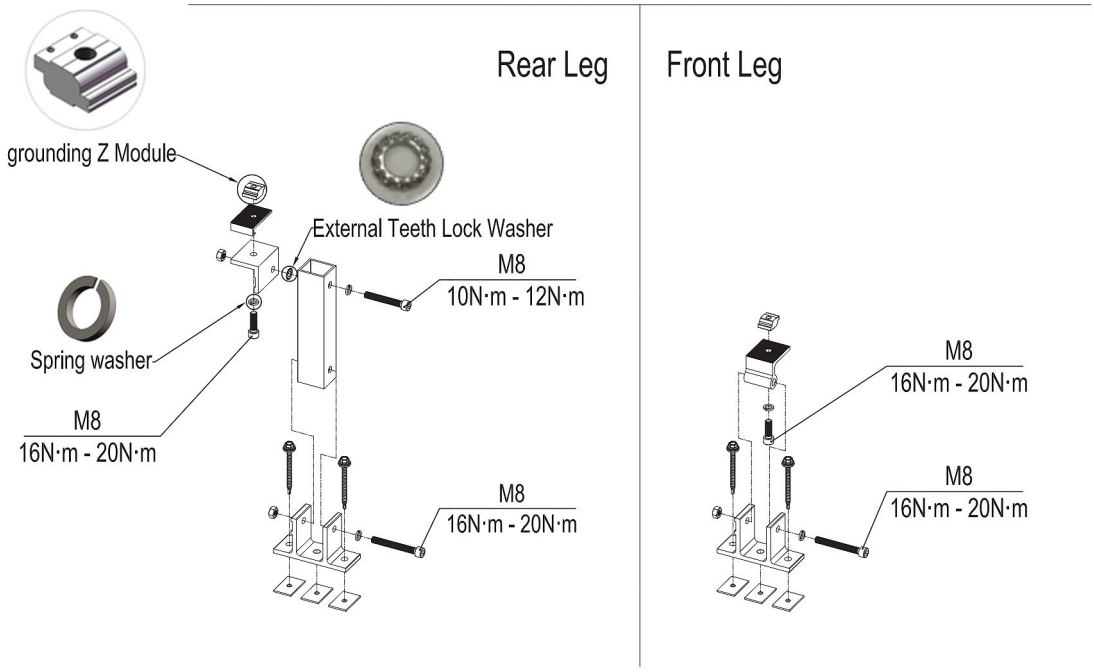

Note:
Grounding Z Module,External Teeth Lock Washer and Spring washer on the diagram above are to create the electrical continuity between rail and rear leg tubes.

Installation Instructions

Installation Dimensions

All drawings and dimensions in this Installation Guide are a generic reference only. PVezRack® SolarRoof is to be optimized to suit specific conditions for each project and should be documented in a construction drawing.

Major components of PVezRack® SolarRoof may be provided in section sizes and lengths varying from those shown in this guide. The installation process detailed in this instruction guide remains the same regardless of changes in component size.

If you need to do any on-site modifications or alteration of the system please provide marked up drawings/sketches for Clenergy's review, prior to modification, for comment and approval.

Installation Instruction

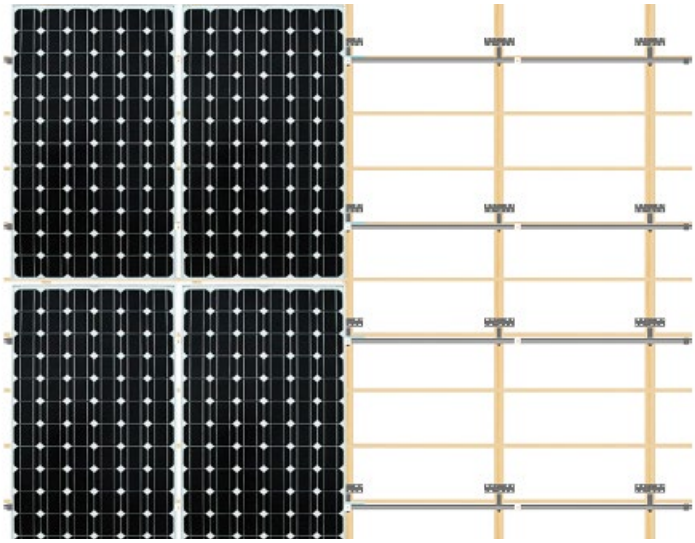

- Assess the number of modules in the vertical direction using the module height plus at least 18mm between modules (please check the installation manual of the solar module manufacturer);
- Assess the Number of modules in the horizontal direction using the module width plus 18 mm (20 mm if using Universal Clamps) between the modules.

Notes:
The standard end clamp will also add 20 mm (except for dual end clamps) on each side to the space required;
- Assess the horizontal spacing of the Roof Hooks;
- Assess the vertical spacing of the Roof Hooks = approx. 1⁄2 to 3⁄4 of module height;
- Always check the installation manual of the PV-Module you use in order to determine the allowed fixing points on the module frame.

Tile Interface Installation

Note:
It is recommended not to install tile interfaces on tile roofs under 15 degrees pitch considering potential damage to building through water ingress, unless the tile manufacturer confirms that the tiles are designed for lower roof pitch.

Determine the positions of the Roof Hooks according to your plans. Remove the roof tiles at the marked positions or, if possible, simply push them up slightly.

Fix the Roof Hooks to the rafter using Clenergy provided Buildex 14 gauge Hex Head Zips screw with minimum 25 mm embedment as shown in the figure on the right following the Buildex screws installation guide below:

- Use a 3/8" Hex Socket.
- Use a mains powered or cordless screw driver with a drive speed of 3,000 RPM maximum.
- Fit the driver bit into the screw and place at the fastening position.
- Apply consistently firm pressure (end load) to the screw driver until the screw is fastened.

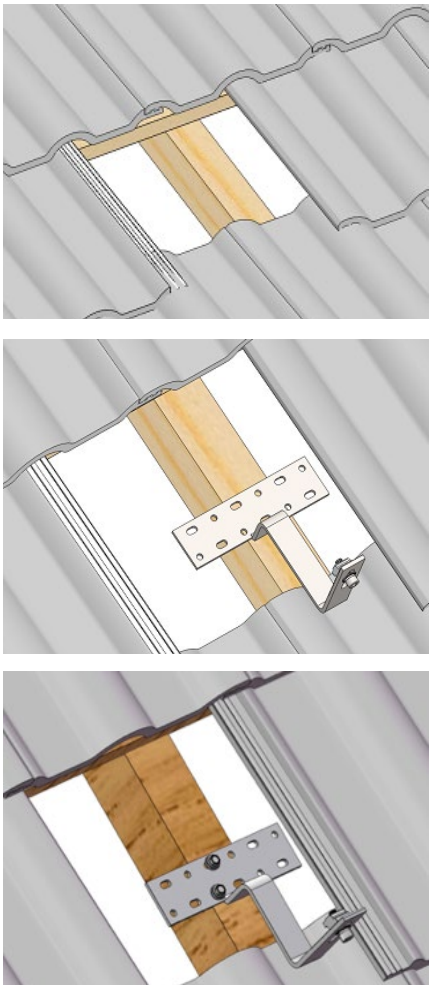

The roof hook must not press against the roof tile. If necessary, pack the roof hook with max pack height of 17 mm for Clenergy provided Buildex 50 mm long screw, with max pack height of 35 mm for Clenergy provided Buildex 65 mm long screw.

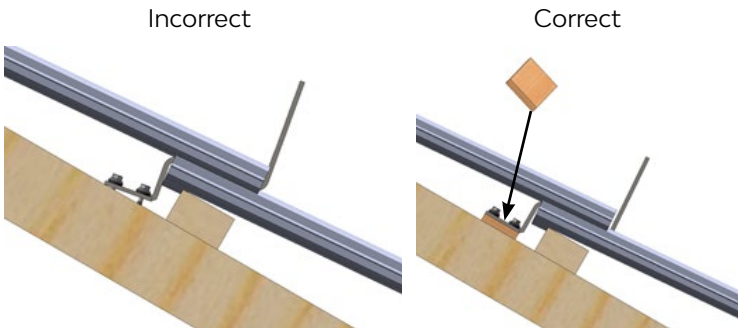

Notes:
When installing Adjustable Tile Interface (ER-I-41/EZC/ECO or ER-I-61/EZC/ECO), height can be adjustable from 35mm to 50mm.

The recommended torque of bolt for height adjustment is 16-20 N·m.

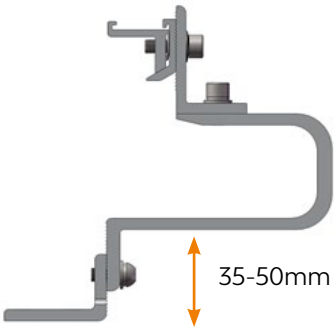

If necessary, use an angle grinder
to cut a recess in the tile covering the Roof Hook at the point where the Roof Hook extends so that the tile lies flat on the surface. If grooved tiles are used, it will also be necessary to cut a recess in the lower tile.

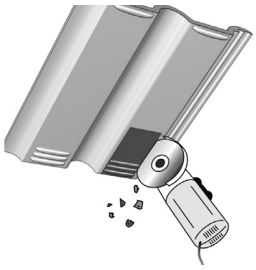
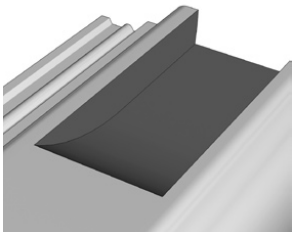
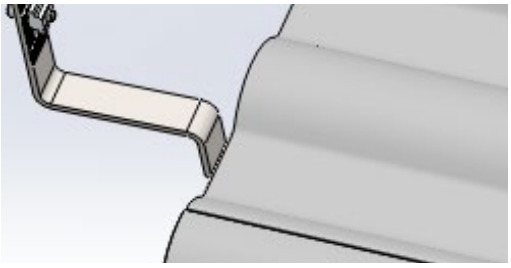

Caution! Do not use fitted roof hooks as a ladder, as this extreme point load could damage the tile below.

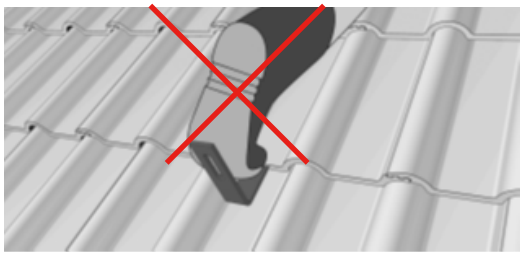

Variation for installation on plain tile roofs with plain tile roof cladding: A recess must be cut into the tiles around the position of the roof hook. The tile flashing should be used if necessary to prevent ingress of water.

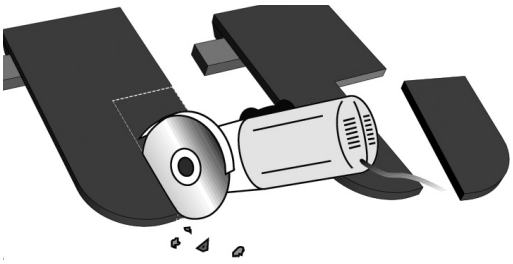

Elite-rail Installation

To connect several rails together, slide half of the splice into the rear side of the rail. Fasten the first M8 Bolt using an Allen key, and slide the next rail into the splice. Tighten the second M8 Bolt using an Allen key. Splice provides the electrical connection between the 2 rails through the pressure bolts. This eliminates the need of using 2 earthing lugs Recommended torque is 10 ~12 Nm.

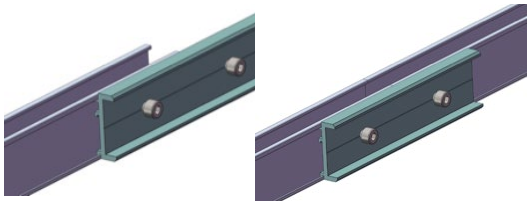

Note: Eco-rail splice is used in Elite-rail installation.

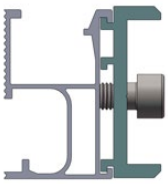

If the rails consist of different lengths, always begin with the shortest piece. Install the PV modules on the Roof Hooks and fasten loosely with M8 x 25 bolt and washers as shown in the figure on the right. Two to three screw turns are adequate for loose installation.

ER-I-01

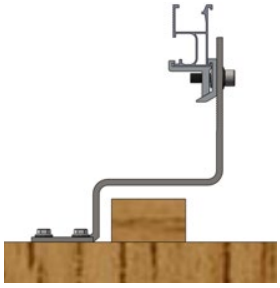

ER-I-01/EZC/ECO

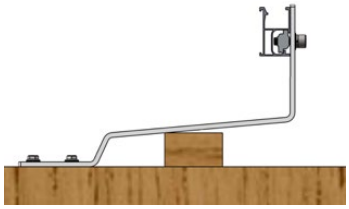

ER-I-02

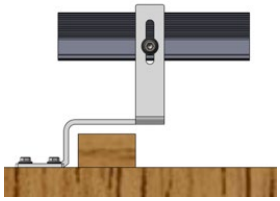

ER-I-23

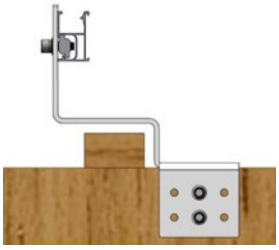

ER-I-26

ER-I-51

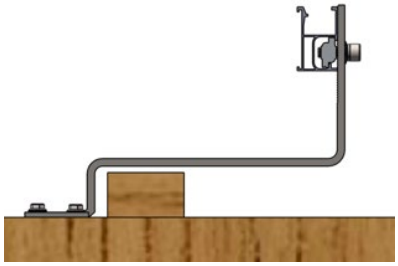

ER-I-71

Adjustable Tile Interface (ER-I-41/EZC/ECO or ER-I-61/EZC/ECO) can adjust L profile bracket on the top to achieve rail running parallel or perpendicular to the rafter. See the figures below.

ER-I-41/EZC/ECO

ER-I-61/EZC/ECO

Notes:

1. For ER-I-41/EZC/ECO adjustable tile interface, interface spacings at 3 different scenarios above are different;
2. There is an adjustable tile interface specific engineering letter (at the end of this installation guide) for both ER-I-41/EZC/ECO and ER-I-61/EZC/ECO.

Adjust the vertical and horizontal positioning using the long hole in the Roof Hook and the loosely connected Z Module in the rail, as shown in the figure on the right. The roof hook should not protrude over the rail after the adjustment.
The recommended torque is 16~20N•m.

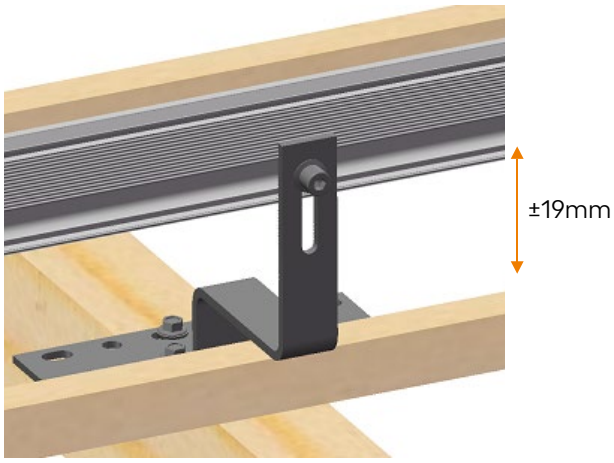

PV Module Installation

1) Please refer PVezRack® Grounding System for PV modules clamps and grounding lugs installations.
2) The installers must ensure panel clamps are installed flush mounted to the panel frame and apply correct torque value of clamp fastener as shown in section "**Safe Torques (Page 19)**".

Tin Interface Installation

For installations using ER-I-05, Tin Interface equipped with Buildex 14-11 x 70 (14 gauge, 6.3 mm, 11 TPI, 70 mm long) Hex Head Zips screw. Fix the ER-I-05 at the planned locations on metal or wood purlins as shown in the figure on the right following the Buildex screws installation guide below:

- Use a 3/8" Hex Socket.

- Use a mains powered or cordless screw driver with a drive speed of 3,000 RPM maximum.

- Fit the driver bit into the screw and place at the fastening position.

- Apply consistently firm pressure (end load) to the screw driver until the screw is fastened.

- Screws with bonded washers should be tightened only until the washer is gripped firmly enough to provide a watertight seal. The screws should be neither under tightened nor over tightened to lead to water penetration. Take particular care to ensure the screw is driven perpendicular to the interface to avoid deformation of the washer.

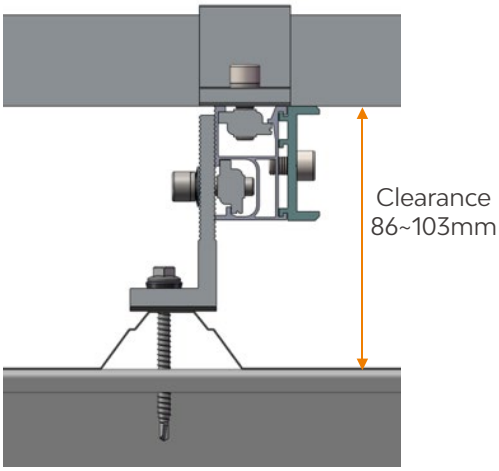

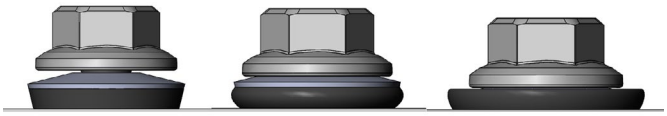

Under Tightened | **Correctly Tightened** | Over Tightened

Repeat "**Rail Installation (Page 24)**" and "**PV Module Installation (Page 26)**" to install the Rails and PV Modules.

Notes:
- The purlin thickness should be no less than 0.42mm and no more than 2.4mm;
- Please refer to the recommended torques in "Safe Torques (Page 19)";
- Screws not exposed to frequent rain should be washed down with fresh water at least every 6 months to meet the warranty conditions of Buildex screws.

For installations using ER-I-05/CM, Tin Interface with Click Module, equipped with Buildex 14-11 x 70 (14 gauge, 6.3 mm, 11 TPI, 70 mm long) Hex Head Zips screw. . Fix the ER-I-05/CM at the planned locations on metal or wood purlins as shown in the figure on the right following the Buildex screws installation guide above. Repeat "**Rail Installation (Page 24)**" and "**PV Module Installation (Page 26)**" to install the Rails and PV Modules.

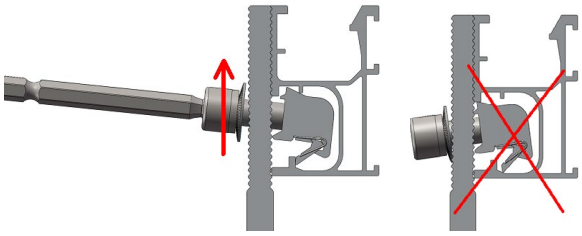

When fastening ER-I-05/CM with rail, it needs to lift up the bolt of click module to make click module well touch with upper rib of side channel of rail. So, the click module can be fixed into the rail properly as shown in the figure on the right.

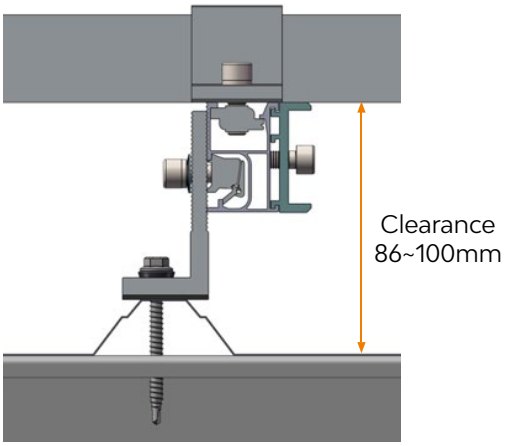

Notes:
- The purlin thickness should be no less than 0.42mm and no more than 2.4mm;
- Please refer to the recommended torques in "**Safe Torques (Page 19)**";
- Screws not exposed to frequent rain should be washed down with fresh water at least every 6 months to meet the warranty conditions of Buildex screws.

For installations using ER-I-05A/EZC/ECO, Tin Interface with ezClick connection with Buildex 14-11 x 70 (14 gauge, 6.3 mm, 11 TPI, 70 mm long) Hex Head Zips screw. Fix the ER-I-05A/EZC/ECO at the planned locations on metal or wood purlins as shown in the figure on the right following the Buildex screws installation guide above. Repeat "**Rail Installation (Page P24)**" and "**PV Module Installation (Page P26)**" to install Rails and PV Modules.

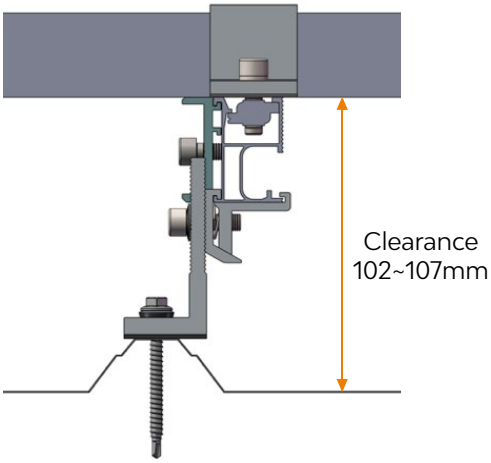

Notes:
- The purlin thickness should be no less than 0.42mm and no more than 2.4mm;
- Please refer to the recommended torques in"**Safe Torques (Page 19)**";
- Screws not exposed to frequent rain should be washed down with fresh water at least every 6 months to meet the warranty conditions of Buildex screws.

For installations using ER-I-25, Tin Interface with Curved Base for Corrugated Roof with Buildex 14-11 x 70 (14 gauge, 6.3 mm, 11 TPI, 70 mm long) Hex Head Zips screw. Fix the ER-I-25 at the planned locations on metal or wood purlins as shown in the figure on the right following the Buildex screws installation guide above. Repeat "**Rail Installation (Page 24)**" and "**PV Module Installation (Page 26)**" to install Rails and PV Modules.

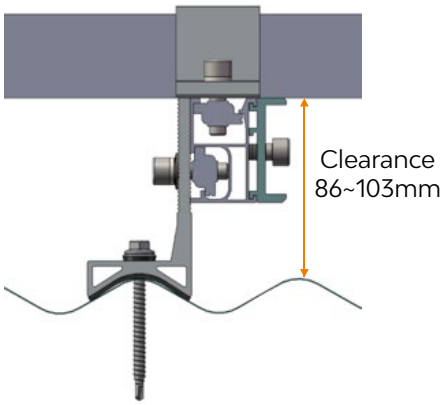

Notes:
- The purlin thickness should be no less than 0.42mm and no more than 2.4mm;
- Please refer to the recommended torques in "**Safe Torques (Page 19)**";
- Screws not exposed to frequent rain should be washed down with fresh water at least every 6 months to meet the warranty conditions of Buildex screws.

For installations using EZ-AD-C43 and ER-I-05, Adapter (Puck) for Corrugated Iron Roof and Tin Interface. Attach the EZ- AD-C43 on the planned position and then fix the ER-I-05 on metal or wood purlins as shown in the figure on the right following the Buildex screws installation guide above. Repeat "**Rail Installation (Page 24)**" and "**PV Module Installation (Page 26)**" to install Rails and PV Modules.

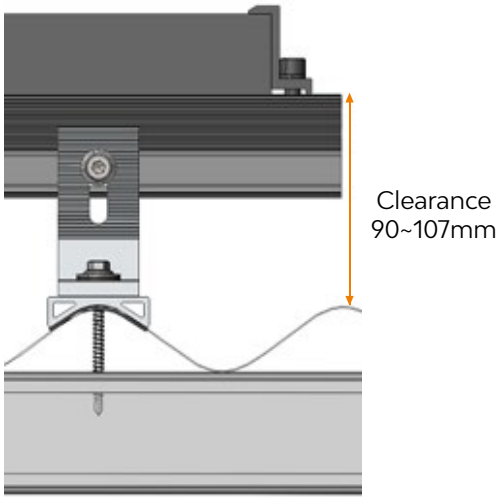

The rail is perpendicular to the Rib of metal sheet roof

Notes:
- The purlin thickness should be no less than 0.42mm and no more than 2.4mm;
- Please refer to the recommended torques in "**Safe Torques (Page 19)**";
- Screws not exposed to frequent rain should be washed down with fresh water at least every 6 months to meet the warranty conditions of Buildex screws.

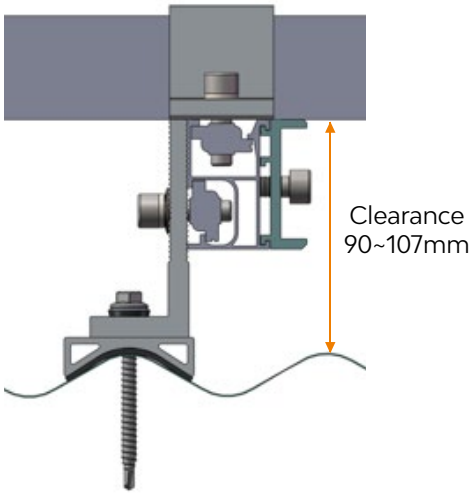

The rail is parallel to the Rib of metal sheet roof

NOTE:
WHEN USING TIN INTERFACES FOR INSTALLATION WORKS, SCREWS NOT EXPOSED TO FREQUENT RAIN SHOULD BE WASHED DOWN WITH FRESH WATER AT LEAST EVERY 6 MONTHS TO MEET THE WARRANTY CONDITIONS OF BUILDEX SCREWS.

Hanger Bolt Installation

Hanger Bolt for Tile Roof Installation

Hanger bolt (ER-HB-8/150) installation on tile roof is only applicable for tile having some part of flat surface, where the rubber seal of hanger bot can mount flush on the tile not to cause waterproof problem. Please note it is installer's responsibility to verify feasibility of tile brackets penetration and to ensure tiles are not cracked and damaged in hanger bolt installation.

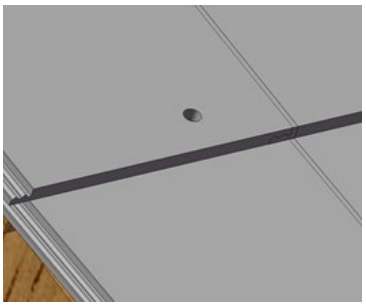

1. Purlins are to be identified when opening tiles and their positions are marked out on the tiles.
2. Based on installation plan and Hanger bolt spacing info., hanger bolt locations are marked on the tiles.

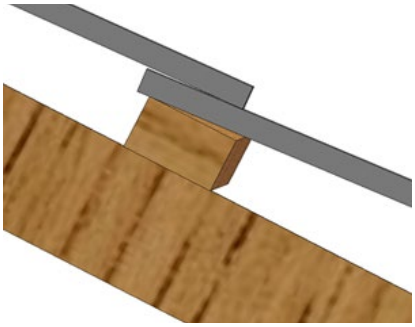

Notes:
Please find tin interface spacing in the certification letter for hanger bolt spacing.

3. Drill 10 mm hole on the marked location of tile and stop when reaching the purlins.

Note: For some installations, it needs to drill through two tiles (overlap) to reach the purlin.

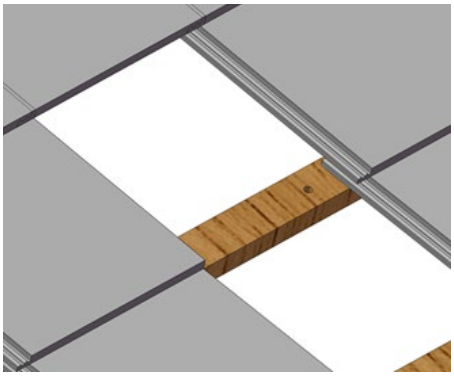

4. Through 10 mm hole on the tiles, pre-drill 6.5 mm hole on the wood purlin for hanger bolt. The tiles are not removed when drilling this hole. After the drilling, clean the dust around 10 mm hole.

5. Adjust the position of rubber seal on the hanger bolt (ER-HB-8/150) to ensure hanger bolt have minimum 25 mm penetration depth into the wood purlin.

Drive and press the hanger bolt firmly in an axial manner to the wood purlin till the rubber seal is firmly flush on the tile and turn the nut down till touching the rubber seal. Please apply for low rotational speed of drive, preferably less than 300 rpm to reduce threads damage. Please turn another 4 threads cycle to press the rubber seal.

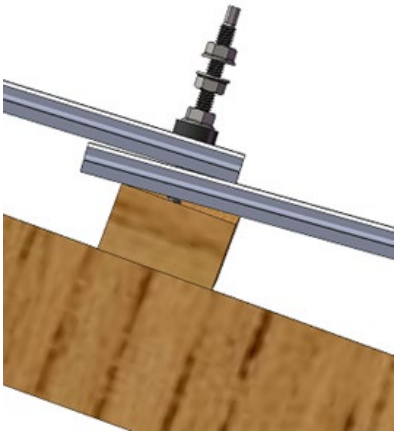

Notes:
1) Purlin thickness and tile thickness need to be verified to decide position of rubber seal for appropriate penetration depth;

2) It shall apply Sikaflex (or similar) sealant around the bolt to fill the gap between the bolt and tile before fixing hanger bolt. Please refer Sikaflex (or similar) instruction for use. It is also recommended to use Loctite Threadlocker Blue (or similar) for the nut holding the rubber seal in place to prevent hanger bolt/nut from leaking or loosening. Please refer Loctite (or similar) instruction for use.

6. Screw out the top nut of hanger bolt, connect and adjust tin foot position and tighten the top nut with the recommended torque of 16~20 N•m.

Follow sections "**Rail Installation (Page P24)**" and "**PV Module Installation (Page P26)**" to install the Rails and PV Modules.

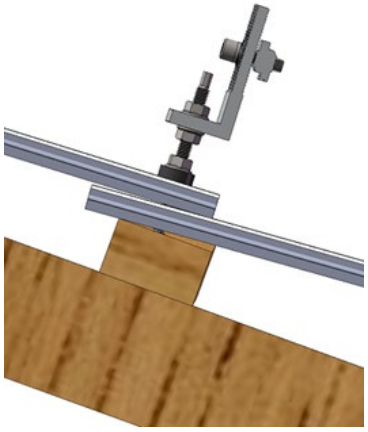

Hanger Bolt for Tin Roof Installation

Hanger Bolt for Tin Roof Installation

1. Hanger Bolt for wood purlin Installation

Hanger bolt (ER-HB-8/150) installation on tin roof is recommended for trapezoidal profile of roof or similar one having flat surface on the rib.

Drill 11 mm hole on the marked location of roof sheet according to installation plan.

Through 11 mm hole on the roof sheet, pre-drill 6.5 mm hole on the wood purlin for hanger bolt.

Adjust the position of rubber seal on the hanger bolt (ER-HB-8/150) to ensure hanger bolt have minimum 25 mm penetration depth into the wood purlin.

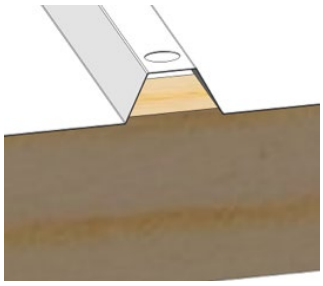

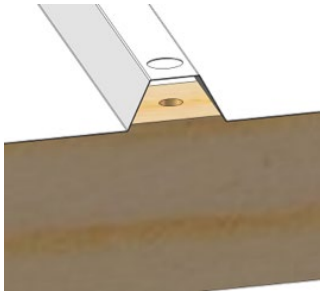

Drive and press the hanger bolt firmly in an axial manner to the wood purlin till the rubber seal is firmly flush on the tile and turn the nut down till touching the rubber seal. Please apply for low rotational speed of drive, preferably less than 300 rpm to reduce threads damage. Please turn another 4 threads cycle to press the rubber seal.

Notes:
1) Penetration depth into the wood purlin is used to decide position of rubber seal;

2) It shall apply Sikaflex (or similar) sealant around the bolt to fill the gap between the bolt and tin roof sheet before fixing hanger bolt. Please refer Sikaflex (or similar) instruction for use. It is also recommended to use Loctite Threadlocker Blue (or similar) for the nut holding the rubber seal in place to prevent hanger bolt/nut from leaking or loosening. Please refer Loctite (or similar) instruction for use.

3) The roof sheet should not have visible deformation after hanger bolt installation.

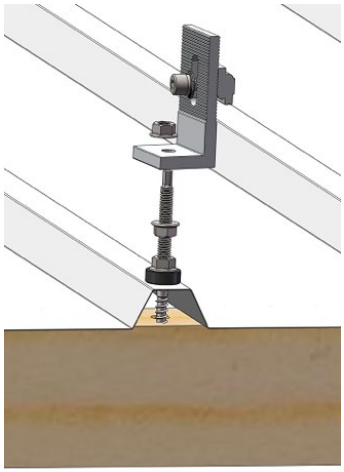

Screw out the top nut of hanger bolt, connect and adjust tin foot position and tighten the top nut with the recommended torque of 16~20 N•m

Follow sections "**Rail Installation (Page P24)**" and "**PV Module Installation (Page P26)**" to install the Rails and PV Modules.

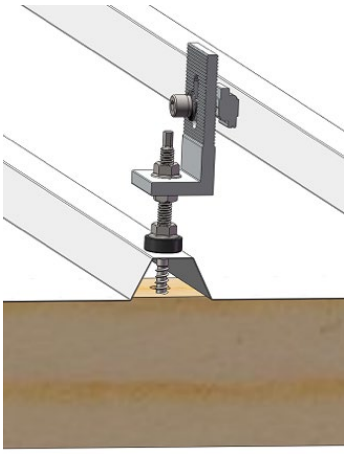

2. Hanger Bolt for metal purlin Installation

Hanger bolt (ER-HB-MP/8/150EP)
installation on tin roof is recommended for trapezoidal profile of roof or similar one having flat surface on the rib.

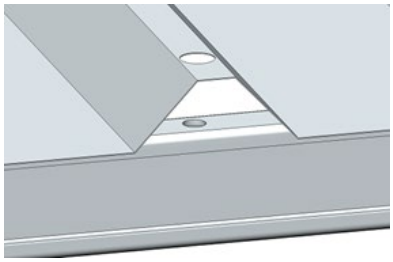

Drill 11 mm hole on the marked location of roof sheet according to installation plan.

Through 11 mm hole on the roof sheet, pre-drill 6.5 mm hole on the metal purlin for hanger bolt.

Drive and press the hanger bolt (ER-HB-MP/8/150EP) firmly in an axial manner to the metal purlin till the rubber seal is firmly flush on the tile and turn the nut down till touching the rubber seal. Please apply for low rotational speed of drive, preferably less than 300 rpm to reduce threads damage. Please turn another 4 threads cycle to press the rubber seal.

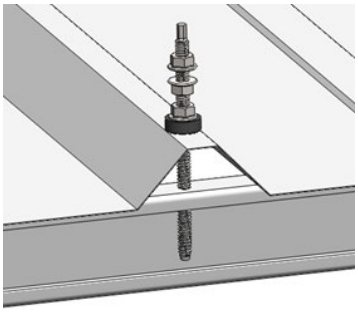

Notes:
1) It shall apply Sikaflex (or similar) sealant around the bolt to fill the gap between the bolt and tin roof sheet before fixing hanger bolt. Please refer Sikaflex (or similar) instruction for use. It is also recommended to use Loctite Threadlocker Blue (or similar) for the nut holding the rubber seal in place to prevent hanger bolt/ nut from leaking or loosening. Please refer Loctite (or similar) instruction for use.
2) The roof sheet should not have visible deformation after hanger bolt installation.

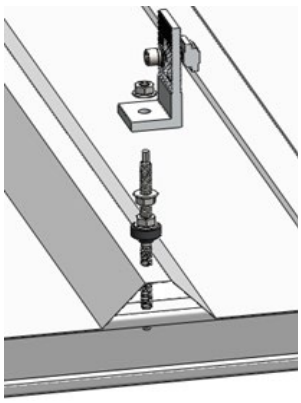

Screw out the top nut of hanger bolt, connect and adjust tin foot position and tighten the top nut with the recommended torque of 16~20 N•m.

Follow sections "**Rail Installation (Page P24)**" and "**PV Module Installation (Page P26)**" to install the Rails and PV Modules.

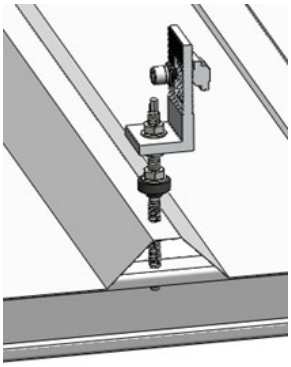

Roof Hook Extender Installation

Roof Hook Extender with Tile Interface Installation

Install the roof hook extender with Tile Interface as shown in the figures on the right.

Either use circular hole or elongated hole of roof hook extender to connect with Tile Interface is allowed.

Recommended torque of M8 bolt is 16~20N•m

Follow sections "**Rail Installation (Page 24)**" and "**PV Module Installation (Page 26)**" to install the Rails and PV Modules.

Roof Hook Extender with Tin Interface Installation

Install the Roof hook Extender with L feet as shown in the figure on the right.

Either use circular hole or elongated hole of roof hook extender to connect with Tin Interface is allowed.

Recommended torque of M8 bolt is 16~20N•m

Follow sections "**Rail Installation (Page 24)**" and "**PV Module Installation (Page 26)**" to install the Rails and PV Modules.

Tilt Leg Installation

Front Leg Installation

Front Leg Installation

According to the installation plan, determine the mounting position and direction of the front legs. Either two screws or single screw (Buildex 14-11 x 70 Hex Head Zips screw) is required depending on the installation spacing requirement. See two screws and single screw options in Figures 5.7a and 5.7b Tin foot front leg installation is in Figure 5.7c .

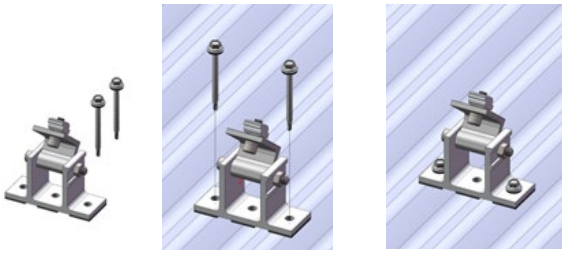

Figure 5.7a
(Front Leg Installation with Two Screws)

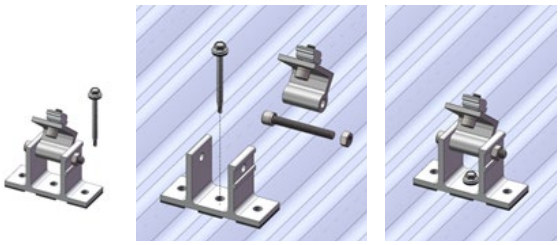

Figure 5.7b
(Front Leg Installation with Single Screw)

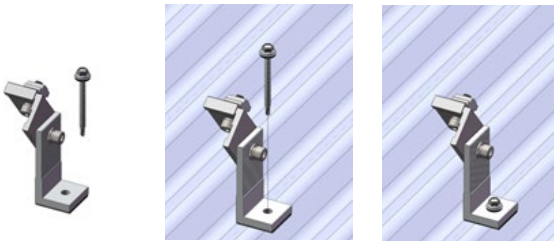

Figure 5.7c
(Tin Foot Front Leg Installation)

Notes:
1. Two screws shall be installed through two side holes of front leg (as shown in Figure 5.7a);
2. Single screw shall be installed through central hole only of front leg (as shown in Figure 5.7b).

Repeat "**Buildex screws installation (Page 26)**" to install the front and rear legs.

Rear Leg Installation

According to the installation plan, after confirming the length L of the Rear Leg, fasten two M8*12 bolts as shown in Figure 5.7d.

Recommended torque for M8*12 bolts is 18~20 N•m

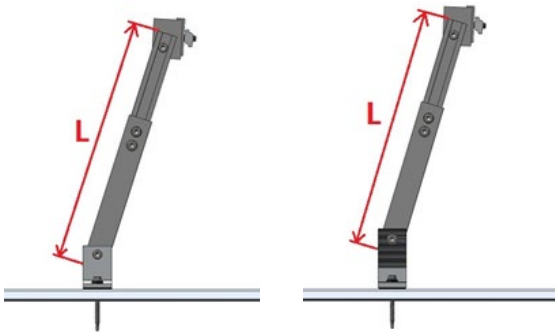

Figure 5.7d

According to the installation plan, either two screws or single screw (Buildex 14-11 x 70 Hex Head Zips screw) is used to install rear leg. Using preassembly or non-preassembly rear legs will make installation steps a bit different as well. See the installation images in Figures 5.7e-5.7i.

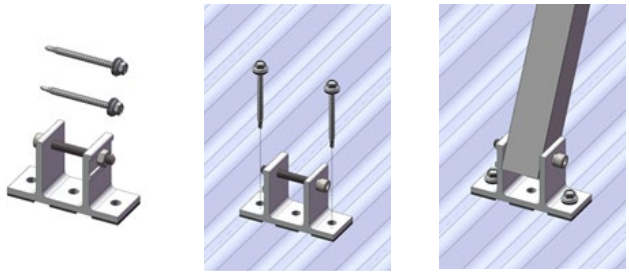

Figure 5.7e
(Non-preassembly Rear Leg Installation with Two Screws)

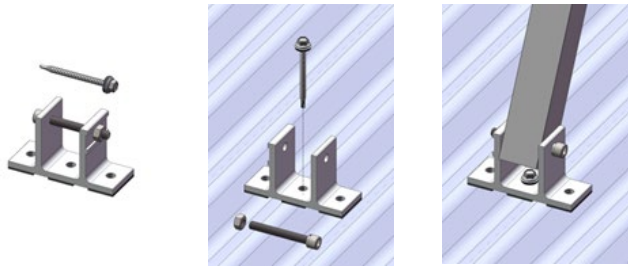

Figure 5.7f
(Non-preassembly Rear Leg Installation with Single Screw)

Figure 5.7g
(Preassembly Rear Leg Installation with Two Screws)

Figure 5.7h
(Preassembly Rear Leg Installation with Single Screw)

Figure 5.7i
(Tin Foot Rear Leg Installation)

Notes:
1. Two screws shall be installed through two side holes of rear leg (as shown in Figures 5.7e and 5.7g);
2. Single screw shall be installed through central hole only of rear leg (as shown in Figures 5.7f and 5.7h).

Install the remaining Front and Rear Legs in Figure 5.7j.

NOTE:
WHEN USING TIN INTERFACES FOR INSTALLATION WORKS, SCREWS NOT EXPOSED TO FREQUENT RAIN SHOULD BE WASHED DOWN WITH FRESH WATER AT LEAST EVERY 6 MONTHS TO MEET THE WARRANTY CONDITIONS OF BUILDEX SCREWS.

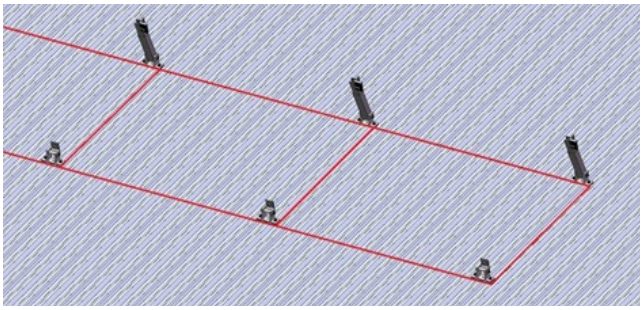

Figure 5.7j

Repeat "**Rail Installation (Page 24)**" and "**PV Module Installation (Page 26)**" to install the Rails and PV Modules.

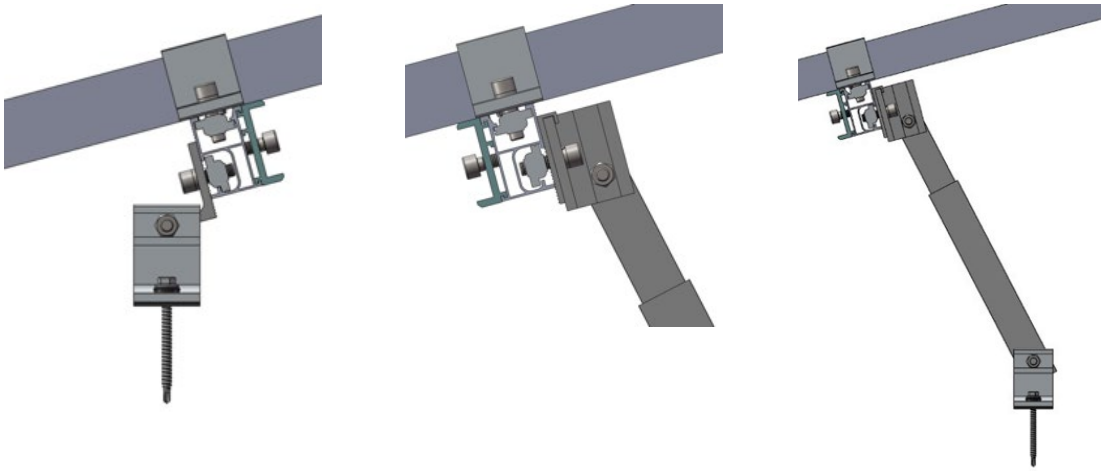

Tin and Tile Flush Mount Certification Letter

MW Engineering Melbourne

CIVIL & STRUCTURAL ENGINEERS
RESIDENTIAL - INDUSTRIAL - COMMERCIAL - PRODUCT DEVELOPMENT
info@mwengineering.melbourne
Phone: 1300 MWENG-0 (1300 69364-0)
www.mwengineering.melbourne
ABN 37 605 815 585

13 September 2023

Clenergy Australia
1/10 Duerdin Street
Clayton, VIC 3168

CERTIFICATION LETTER

Clenergy PV-ezRack SolarRoof Tin and Tile penetrative Flush interface certification (Elite Rail)
TC2, 2.5, 3 – Wind Region A, B1, B2, C and D Internal REF: **00689-ELT-1** . Project REF: **CL-1171-Y.REV.1.**

MW Engineering Melbourne, being Structural Engineers within the meaning of Australian regulations, have calculated the maximum spacings for the PV ez-Rack rail system for the following conditions:

- **Wind Loads to AS 1170.2-2021**
  - **Wind Terrain Category 2, 2.5 and 3**
  - **Wind average recurrence of 200 years**
  - **Wind Region A, B1, B2, C and D**
- **Solar panel length up to 2.4 m**
- **Solar panel width up to 1.2 m**

Attached are the tables showing the spacings according to Wind Region, roof pitch, and building height.

The values shown on these tables will be valid unless an amendment is issued on any of the following codes:

- **AS/NZS 1170.0- 2002 AMDT 4-2016**	**General Principles**
- **AS/NZS 1170.1- 2002 AMDT 4-2016**	**Imposed Loadings**
- **AS/NZS 1170.2- 2021**	**Wind Loadings**
- **AS/NZS 1664.1- 1997 AMDT 1:1999**	**Aluminium Code**

Should you have any queries, do not hesitate to contact us.

Best Regards,

Alberto Escobar
Civil/Structural Engineer
BEng MIEAust NER
PE 0003615
RPEQ 18759
BDC 3134
BPB (NT) 262228ES
BSP (TAS) 845530344
info@mwengineering.melbourne

September 2023

STRUCTURAL DESIGN CERTIFICATION

Tin and Tile Flush
Penetrative Interface spacing tables
(Elite Rail)

Standard: AS/NZS 1170.2:2021

Terrain Category: 2, 2.5 & 3

Topographic Multiplier: 1

Client: Clenergy Australia

REF: 00689 -ELT-1

Date: SEPTEMBER 2023

Limitation: This report has been prepared for the exclusive use of Clenergy Australia, and is subject to and issued in connection with the provisions of the agreement between MW Engineering Melbourne and Clenergy Australia. MW Engineering Melbourne accepts no liability or responsibility whatsoever for any use of or reliance upon this report by any third party other than Clenergy's clients.

Clenergy reference: CL-1171- Y Rev.1

Project: PV-ezRack SolarRoof Tin and Tile Flush Penetrative interface spacing tables

Australian Standards

AS/NZS 1170.0:2002 (R2016)	**General Principles**
AS/NZS 1170.1:2002 (R2016)	**Imposed Loadings**
AS/NZS 1170.2:2021	**Wind Loadings**
AS/NZS 1664.1:1997-Amdt 1:1999	**Aluminium**

Rail type: ELITE-RAIL

Wind Terrain Category: 2, 2.5 & 3

Wind average recurrence: 200 years

This engineering document was designed to cater for most common installation scenarios defined with an importance level 2 (200 years wind average recurrence) such as residential shed or garage, small - isolated warehouses and farm sheds, residential carports, and one or double storey dwelling. If the project conditions do not fit on the above criteria, please contact Clenergy for an assessment.

From 1 May 2023 installers must follow AS/NZS1170.2:2021 only.

Designed: AE

Date: September 2023

Disclaimer: From the date of publication onwards, any amendment made to any of the above-mentioned Standards will make this report outdated and a new one will have to be released, unless the amendment has no implications on this certificate.

PV-ezRack SolarRoof Interface spacing table

Type of Rail	ER-R-ELT (Refer to Appendix I for other compatible rails)
Type of Interface	ER-I-01 (Tile Interface)
Solar Panel Dimension	2.1 m x 1 m (Refer to **Note 19** for other panel sizes)

ROOF ANGLE	0° < α ≤ 10°									
TC	3									
BUILDING HEIGHT (m)	≤ 5		5<H≤10		10<H≤15		15<H≤20		20<H≤30	
	UW &DW	Central	UW &DW	Central	UW &DW	Central	UW &DW	Central	UW &DW	Central
A	1669	1836	1619	1781	1536	1689	1519	1671	1469	1616
B1	1452	1597	1227	1350	1118	1230	1027	1140	955	1050
B2	1002	1102	918	1010	801	881	694	764	651	716
C	951	1047	781	859	709	780	662	728	618	680
D	579	637	532	585	456	501	412	454	391	430

ROOF ANGLE	0° < α ≤ 10°									
TC	2.5									
BUILDING HEIGHT (m)	≤ 5		5<H≤10		10<H≤15		15<H≤20		20<H≤30	
	UW &DW	Central	UW &DW	Central	UW &DW	Central	UW &DW	Central	UW &DW	Central
A	1569	1726	1522	1674	1444	1588	1428	1571	1381	1519
B1	1365	1502	1153	1269	1051	1157	966	1072	898	987
B2	942	1036	863	949	753	829	653	718	612	673
C	894	984	734	808	666	733	622	684	581	640
D	544	598	500	550	428	471	388	426	367	404

ROOF ANGLE	0° < α ≤ 10°									
TC	2									
BUILDING HEIGHT (m)	≤ 5		5<H≤10		10<H≤15		15<H≤20		20<H≤30	
	UW &DW	Central	UW &DW	Central	UW &DW	Central	UW &DW	Central	UW &DW	Central
A	1488	1637	1444	1588	1369	1506	1355	1490	1310	1441
B1	1295	1424	1094	1203	997	1097	916	1017	851	937
B2	893	982	819	901	714	786	619	681	581	639
C	848	933	697	766	632	695	590	649	551	607
D	516	568	474	521	406	447	368	404	348	383

PV-ezRack SolarRoof Interface spacing table (Cont.)

Type of Rail	ER-R-ELT (Refer to Appendix I for other compatible rails)
Type of Interface	ER-I-01 (Tile Interface)
Solar Panel Dimension	2.1 m x 1 m (Refer to **Note 19** for other panel sizes)

ROOF ANGLE	10° < α ≤ 20°									
TC	3									
BUILDING HEIGHT (m)	≤ 5		5<H≤10		10<H≤15		15<H≤20		20<H≤30	
	UW &DW	Central	UW &DW	Central	UW &DW	Central	UW &DW	Central	UW &DW	Central
A	1635	1798	1586	1744	1504	1654	1488	1636	1438	1582
B1	1422	1564	1201	1322	1095	1205	1006	1116	935	1029
B2	981	1079	899	989	785	863	680	748	638	701
C	932	1025	765	842	694	764	648	713	606	666
D	567	623	521	573	446	491	404	444	383	421

ROOF ANGLE	10° < α ≤ 20°									
TC	2.5									
BUILDING HEIGHT (m)	≤ 5		5<H≤10		10<H≤15		15<H≤20		20<H≤30	
	UW &DW	Central	UW &DW	Central	UW &DW	Central	UW &DW	Central	UW &DW	Central
A	1531	1684	1485	1633	1408	1549	1393	1532	1347	1482
B1	1332	1465	1125	1238	1026	1128	942	1046	876	963
B2	918	1010	842	926	735	808	637	700	597	657
C	873	960	716	788	650	715	607	668	567	624
D	531	584	488	536	418	460	378	416	358	394

ROOF ANGLE	10° < α ≤ 20°									
TC	2									
BUILDING HEIGHT (m)	≤ 5		5<H≤10		10<H≤15		15<H≤20		20<H≤30	
	UW &DW	Central	UW &DW	Central	UW &DW	Central	UW &DW	Central	UW &DW	Central
A	1462	1608	1418	1559	1345	1479	1330	1463	1286	1415
B1	1272	1399	1074	1182	979	1077	899	998	836	920
B2	877	965	804	884	702	772	608	669	570	627
C	833	916	684	752	621	683	580	637	542	596
D	507	557	466	512	399	439	361	397	342	376

PV-ezRack SolarRoof Interface spacing tables (Cont.)

Type of Rail	ER-R-ELT (Refer to Appendix I for other compatible rails)
Type of Interface	ER-I-01 (Tile Interface)
Solar Panel Dimension	2.1 m x 1 m (Refer to **Note 19** for other panel sizes)

ROOF ANGLE	20° < α ≤ 30°									
TC	3									
BUILDING HEIGHT (m)	≤ 5		5<H≤10		10<H≤15		15<H≤20		20<H≤30	
	UW &DW	Central	UW &DW	Central	UW &DW	Central	UW &DW	Central	UW &DW	Central
A	1615	1777	1567	1724	1486	1635	1470	1617	1422	1564
B1	1405	1546	1187	1306	1082	1191	994	1103	924	1016
B2	969	1066	888	977	775	853	672	739	630	693
C	921	1013	756	832	686	755	641	705	599	658
D	560	616	515	566	441	485	399	439	378	416

ROOF ANGLE	20° < α ≤ 30°									
TC	2.5									
BUILDING HEIGHT (m)	≤ 5		5<H≤10		10<H≤15		15<H≤20		20<H≤30	
	UW &DW	Central	UW &DW	Central	UW &DW	Central	UW &DW	Central	UW &DW	Central
A	1515	1667	1470	1617	1394	1534	1379	1517	1334	1467
B1	1318	1450	1114	1225	1015	1117	932	1035	867	953
B2	909	1000	833	917	727	800	630	693	591	650
C	864	950	709	780	644	708	601	661	561	618
D	525	578	483	531	414	455	374	412	355	390

ROOF ANGLE	20° < α ≤ 30°									
TC	2									
BUILDING HEIGHT (m)	≤ 5		5<H≤10		10<H≤15		15<H≤20		20<H≤30	
	UW &DW	Central	UW &DW	Central	UW &DW	Central	UW &DW	Central	UW &DW	Central
A	1446	1591	1403	1543	1330	1464	1316	1448	1273	1400
B1	1258	1384	1063	1169	969	1066	890	988	827	910
B2	868	954	795	875	694	764	602	662	564	620
C	824	907	677	744	614	676	573	631	536	589
D	501	551	461	507	395	434	357	393	338	372

PV-ezRack SolarRoof Interface spacing table

Type of Rail	ER-R-ELT (Refer to Appendix I for other compatible rails)
Type of Interface	ER-I-05 (Tin Interface)
Solar Panel Dimension	2.1 m x 1 m (Refer to **Note 19** for other panel sizes)

Angle	0° < α ≤ 30°									
TC	3									
Building Height (m)	≤ 5		5<H≤10		10<H≤15		15<H≤20		20<H≤30	
	UW & DW	Central	UW & DW	Central	UW & DW	Central	UW & DW	Central	UW & DW	Central
A	1515	1805	1505	1850	1500	1750	1427	1484	1365	1417
B1	1415	1492	1315	1492	1347	1468	1296	1411	1152	1350
B2	1367	1439	1270	1439	1302	1416	1252	1362	1114	1303
C	1237	1399	1237	1399	1179	1331	1135	1281	1087	1227
D	1103	1244	1103	1244	989	1185	884	1141	778	1094

Angle	0° < α ≤ 30°									
TC	2.5									
Building Height (m)	≤ 5		5<H≤10		10<H≤15		15<H≤20		20<H≤30	
	UW & DW	Central	UW & DW	Central	UW & DW	Central	UW & DW	Central	UW & DW	Central
A	1510	1800	1474	1700	1396	1550	1356	1407	1310	1358
B1	1369	1441	1227	1389	1268	1379	1232	1340	1106	1295
B2	1322	1391	1185	1341	1225	1332	1191	1295	1070	1251
C	1197	1353	1156	1305	1111	1253	1072	1218	970	1178
D	1036	1204	934	1163	828	1117	763	1086	691	987

Angle	0° < α ≤ 30°									
TC	2									
Building Height (m)	≤ 5		5<H≤10		10<H≤15		15<H≤20		20<H≤30	
	UW & DW	Central	UW & DW	Central	UW & DW	Central	UW & DW	Central	UW & DW	Central
A	1461	1700	1382	1480	1319	1368	1292	1340	1260	1305
B1	1326	1394	1152	1304	1199	1303	1176	1278	1065	1245
B2	1281	1347	1114	1259	1159	1260	1137	1235	1030	1204
C	1161	1310	1087	1227	989	1186	934	1163	867	1134
D	944	1167	778	1094	704	1007	665	950	618	882

General Notes

Note 1. Tile roof interface spacing tables are based on a minimum depth into **F7 (Pine) timber of 25mm** (using two screws) whereas **Tin roof interface** spacing tables based on a minimum depth into **F7 (Pine) timber of 35mm** and **Steel Purlins G450 1.5mm thick** (using one screw)

Note 2. This engineering document was designed to cater for the most common installation scenarios however, it does not cater for all of them. Contact Clenergy if you are unable to comply with any of the installation specifications listed on this document or refer to the latest light commercial certificate.

Note 3. Standard screws shipped for tin and tile Roof Interfaces

Metal Purlins/Battens	**Fasteners to be used**
0.42 mm to 0.75 mm	Buildex- 14 - 11 x 70 Hex Head Zips with 16 mm Aluminium Bonded Washer on G550 Steel Battens or a screw that has an equal or a higher pullout capacity.
1.2 mm to 2.4 mm	Buildex- 14 - 11 x 70 Hex Head Zips with 16 mm Aluminium Bonded Washer or a screw that has an equal or a higher pullout capacity.
Wood Purlins and Rafters	**Fasteners to be used**
Timber F7 (Pine) and Timber 17 (Hardwood).	**Tin Interface:** Buildex- 14 - 11 x 70 Hex Head Zips with 16 mm Aluminium Bonded Washer or a screw that has an equal or a higher pullout capacity.
	Tile Interface: Buildex- 14 - 11 x 70 Hex Head Zips with 16 mm Aluminium Bonded Washer or a screw that has an equal or a higher pullout capacity or 14-10 x 50 Hex Head T17 with 16mm ABW Climaseal 3 or 14-10 x 65 Hex Head T17 Climaseal 3 or other screw of pullout value not less than screws above.

Note 4. The **Tin interface** increase, or reduction factors are listed below. These are depending on the type of tophat, purlin or batten as per the below table.

Purlin Material	Purlin thickness (mm)	Min. embedment (mm)	Spacing +/- (WR A)	Spacing +/- (WR B1)	Spacing +/- (WR B2)	Spacing +/- (WR C)	Spacing +/- (WR D)
Timber (Pine F7)	-	25	-25%	-35%	-35%	-35%	-35%
Timber (Pine F7)	-	30	-20%	-25%	-25%	-25%	-25%
Timber (Pine F7)	-	35	-	-	-	-	-
Timber (Hardwood F17)	-	25	-	-	-	5%	10%
Timber (Hardwood F17)	-	30	-	-	-	10%	15%
Timber (Hardwood F17)	-	35	-	-	-	10%	20%
Metal (G550)	0.42	-	-75%	-80%	-80%	-80%	-80%
Metal (G550)	0.48	-	-60%	-70%	-70%	-70%	-70%
Metal (G550)	0.55	-	-50%	-65%	-65%	-65%	-65%
Metal (G550)	0.75	-	-25%	-30%	-30%	-30%	-30%
Metal (G450)	1.2	-	-20%	-30%	-30%	-30%	-30%
Metal (G450)	1.5	-	-	-	-	-	-
Metal (G450)	1.9	-	-	-	-	5%	10%
Metal (G450)	2.4	-	-	-	-	5%	10%

Note 5. Minimum number of screws to be used when installing **tile** (ER-I-01) interface to be two (2) and when installing **tin** (ER-I-05) interface to be one (1).

Note 6. Spacings on tile interfaces will be reduced as follows:

Interface	% of Reduction
ER-I-01/CS, ER-I-51, ER-I-01/EZC/ECO & ER-I-71	-
ER-I-02	-50%
ER-I-04	-50%
ER-I-23	-28%
ER-I-26	-28%

Note 7. The more conservative spacing has to be used if one panel or panel row falls between two roof zones.

Note 8. The components list mentioned on the Appendix I are satisfied for use according to AS/NZS 1664.1:1997-Amdt 1:1999 and AS/NZS 1170.2:2021

Note 9. For Terrain Category (TC) definition, please refer to clause 4.2.1 of AS/NZS 1170.2:2021.

Note 10. For topographic Multiplier (Mt) more than 1.0 (installations on a mountain, hilly or sloped terrain) please refer to clause 4.4 of AS/NZS 1170.2:2021 to define appropriate Topographic multiplier value.

The below table provides a reduction factor applied for topographic multipliers greater than 1 (installation on a slope, hill on mountain). To achieve a more accurate and cost-effective design and installation in wind region C & D, please contact Clenergy Engineering department.

Mt	**A, B1, B2**	
	U.W & D. W	**Central**
1	1	1
1.01	1.00	1.00
1.02	1.00	1.00
1.03	0.92	0.94
1.04	0.92	0.94
1.06	0.92	0.88
1.08	0.85	0.88
1.09	0.85	0.81
1.1	0.85	0.81
1.2	0.69	0.69
1.3	0.54	0.56
1.4	0.46	0.50
1.5	0.38	0.44

Note 11. Shielding Multiplier (Ms) taken as 1.0. Refer to clause 4.3 of AS/NZS 1170.2:2021 for more information.

Note 12. Wind Direction Multiplier (Md) taken as 1.0. Refer to clause 3.3 of AS/NZS 1170.2:2021 for more information.

Note 13. This certificate cannot be used if the site is located on a hill, ridge or escarpment. Contact Clenergy if the aforementioned condition is met on site.

Note 14. From the date of publication onwards, any amendment made to any of the above-mentioned Standards will make this report outdated and a new one will have to be released, unless the amendment has no implications on this certificate.

Note 15. This certificate only covers the assessment of the Clenergy PV-ezRack mounting system, including the components listed on note 3 and 8. The assessment of the roof structure, PV panels and other fixings are to be checked by the installer/contractor, if necessary.

Note 16. Only hip and gable roofs installations are covered on this certificate. Contact Clenergy if you are planning to install on a different roof type such as curved, multi-span (pitched and saw-tooth), mansard, circular bin, silo, tank, pitched free, troughed free, hyper free, canopy, awning and cantilivered roof.

Note 17. No consideration has been taken on the effect of snow loads. In case the roof is located in a snow prone area, a special design must be made.

Note 18. No consideration has been taken on the effect of earthquake loads.

Note 19. This Engineering report is based on 2.1 m x 1 m panels and two rails per panel. However, a percentage increase could be applied on all interface spacings as shown on the following table.

Number of rails per panel	Panel length (mm)	Spacing +/-	Spacing +/-
		W.R – A & B1	W.R –B2 C & D
2 rails	≤ 1700	6%	10%
3 rails	≤ 1700	12%	18%
4 rails	≤ 1700	15%	20%
2 rails	≤ 1800	4%	7%
3 rails	≤ 1800	12%	18%
4 rails	≤ 1800	15%	20%
2 rails	≤ 1900	4%	7%
3 rails	≤ 1900	10%	15%
4 rails	≤ 1900	12%	18%
2 rails	≤ 2100	0%	0%
3 rails	≤ 2100	10%	15%
4 rails	≤ 2100	12%	18%
2 rails	≤ 2200	-12%	-12%
3 rails	≤ 2200	7%	12%
4 rails	≤ 2200	12%	18%
2 rails	≤ 2300	-16%	-12%
3 rails	≤ 2300	5%	12%
4 rails	≤ 2300	10%	15%
2 rails	≤ 2400	-19%	-15%
3 rails	≤ 2400	5%	10%
4 rails	≤ 2400	8%	12%

Note 20. Panel width cannot exceed 1.20 m for any of the above panel length dimensions and panel weight cannot exceed 15 kg/m^2.

Note 21. Rail overhang ends where the panel finishes, and it should be less than 40% of the last installed interface spacing.

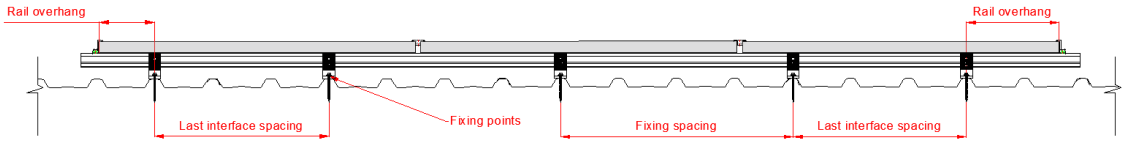

Note 22. ER-R-ECO rail splice can only be installed within 1/3 of the fixing spacing (centre to centre) from the nearest interface when fixing spacing is over 1700 mm.

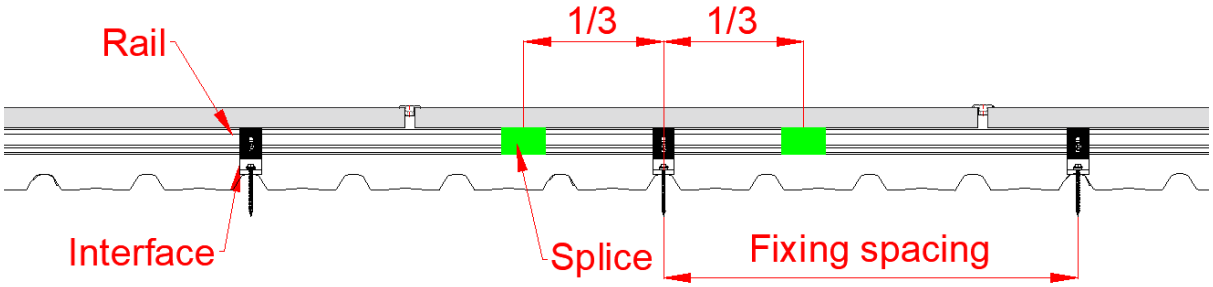

Note 23. ER-R-ECO rail splice cannot be installed on rail overhangs.

Note 24. Neither Clenergy nor MW Engineering Melbourne are responsible for external factors leading to compression of the tile interfaces.

Note 25. All components from Clenergy must be installed according to manufacturer's specification and the instructions shown in the relevant installation manual. Please check the Clenergy Australia website or contact them for access to the most recent installation manuals.

Note 26. Capacities checked and compared against testing data from Clenergy Australia and MTS (NATA certified).

Note 27. General conditions

Note 27.1	Minimum steel purlin strength of 450 MPa and 550 MPa for tophats.
Note 27.2	Timber Grade members: F7 (Pine) and F17 (Hardwood).
Note 27.3	If any of the screws of the interfaces go into pre-existing holes, they will have to be one size up compared to the screws that were previously installed. This is to ensure that the pullout capacity remains the same or higher.

Note 28. Clamping zone of the PV panels should be according to the manufacturer’s specifications.

Note 29. When using Roof Extender (ER-RE-200), reduce interface spacings by 15% on Wind Region A and B1 and 30% on Wind Region B2, C and D.

Note 30. Please refer to AS 4312 to find out about corrosion categories.

Note 31. Conditions for flush mounted systems installed on flat and pitched roofs are according to the B6 Appendix of the AS/NZS 1170.2:2021. Where the following conditions need to be met:

- Roof pitch to be between 1° and 30°.

- h/d ≤ 0.5 and h/b ≤ 0.5. Being h= height, b= width and d= length of the building as per the below picture.
- Gap between the underside of the panel and the roof to be no less than 50mm and no more than 300mm.

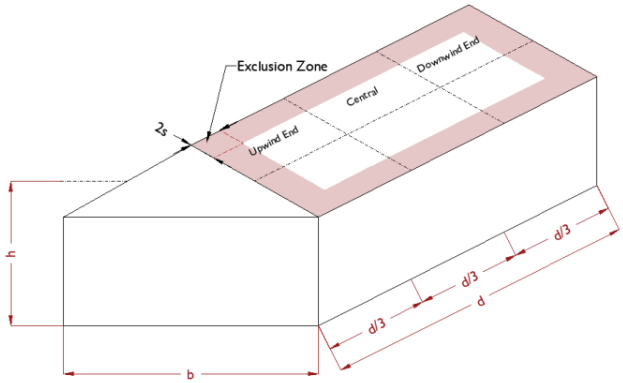

Note 32. Exclusion zone for flush installation to be the minimum distance from the edge of the roof "2 x s", where "s" is the gap between the underside of the panel and the roof.

Note 33. Refer to the latest commercial certificate when the conditions from Note 31 and 32 doesn't meet the conditions on section B6 part (d) of the AS/NZS 1170.2:2021 standard for roof angle is between 1° to 30°.

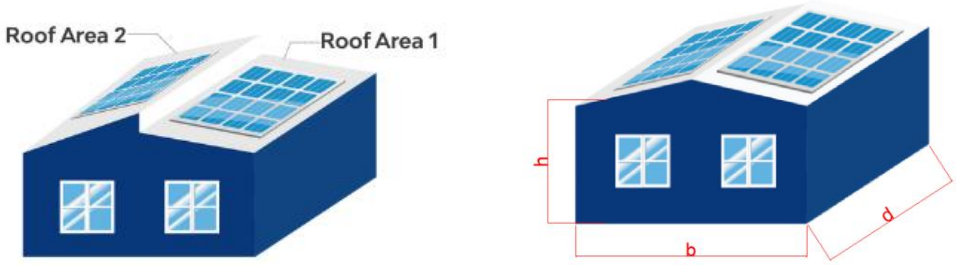

Note 34. For Hanger Bolt installation on either tin or tile roof, the spacing to apply with a minimum embedment depth of 25mm into F17 (Hardwood) timber or fixing to metal purlin with 1.5 mm thickness is the same as the tin roof interface spacing (ER-I-05). The Hanger Bolts for wood purlin/rafter installation are ER-HB-8/150 and ER-HB-10/200A. The Hanger Bolt for metal purlin/rafter is ER-HB-MP/8/150EP. Contact Clenergy if your project doesn't meet the above requirements.

Note 35. Neither Clenergy nor MW Engineering Melbourne will be responsible for the integrity of the roof tiles when using hanger bolts for the solar installation. It will be the clients' responsibility to check the hanger bolt installation feasibility.

<u>Example</u>
Project Address: 10 May, Falls, VIC.
Roof Type: Tin roof
Building height: 5 m
Building dimensions: 90 x 30 m
Roof pitch: less than 10°

Panel dimension: 2 m x 1 m
Purlin spacing: 1500 mm.
Rail running perpendicular to purlins.

Step 1: Define wind region, terrain category and topographic multiplier based on the project address. Please refer to AS/NZS 1170.2:2021 to define Wind regions, terrain category and topographic multiplier. If the site has a topographic multiplier > 1 refer to note 10.

For this example:

Wind region: A
Terrain category: 3
Topographic multiplier: 1

Step 2: Check if the Flush system meets the conditions on the B6 Appendix of the AS/NZS 1170.2:2021. Where the following conditions need to be met:

- Roof pitch to be between 1° and 30°. ✓
- h/d ≤ 0.5 and h/b ≤ 0.5. Being h= height, b= width and d= length of the building as per the below picture. 5/30 = 0.16 ≤ 0.5 ✓ and 5/90 = 0.05 ≤ 0.5✓
- Gap between the underside of the panel and the roof to be no less than 50mm and no more than 300mm. ✓

Step 3: According to the spacing tables shown on this document:

- Central zone: 1805 mm
- Upwind & Downwind: 1515 mm

Installation to be done as per following fixing spacings:

- Central zone: 1500 mm
- Upwind & Downwind: 1500 mm

Step 4: Define roof zone definition as per image below.

d = 90 m
b = 30 m
d/3 = 90/3 = 30 m

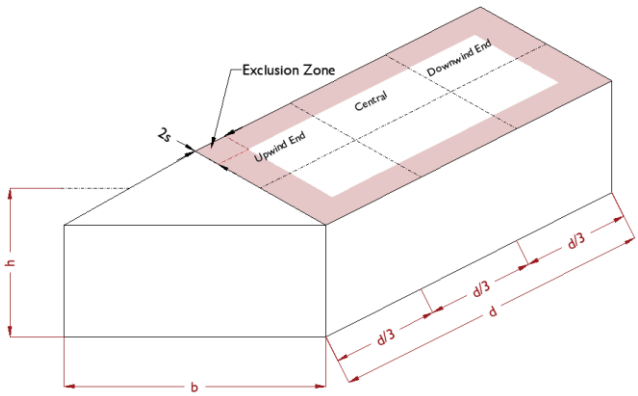

Exclusion zone for flush installation to be the minimum distance from the edge of the roof "2 x s", where "s" is the gap between the underside of the panel and the roof. Refer to the exclusion zone (red area) on the above image.

Appendix I – Component list

Components	Part No.	Description
Elite Rail	ER-R-ELT/XXXX	Elite Rail
Splice	ER-SP-ECO	Splice
Elite Rail Black	ER-R-ELT/XXXX/BA	Elite-Rail Black
Splice	ER-SP-ECO/BA	Splice, Black
Tile Interfaces	ER-I-01, 02, 04, 23, 26, 51 and 71	Tile Interfaces
Tile Interface	ER-I-01/CS	Carbon Steel Tile Interface
Tile Interface	ER-I-01/EZC/ECO	Tile Interface with ezClick connection
Tin Interface	ER-I-05	Tin Interface
Tin Interface	ER-I-05/BA	Tin Interface Black
Tin Interface	ER-I-05/CM	Tin Interface with click module
Tin Interface	ER-I-05A/EZC/ECO	Tin Interface with ezClick connection
Tin Interface	ER-I-05/C5	Tin Interface with C5 rated Screw
Tin Interface	ER-I-25	Tin Interface with Curved Base
Tin Interface	EZ-AD-C43	Adapter (Puck) for Corrugated Roof
Tin Interface	ER-I-25/BA	Black Tin Interface with Curved Base
Tin Interface	EZ-AD-C43/BA	Black Adapter (Puck) for Corrugated Roof
Tin Interface	EZ-AD-C110	Adapter for Corrugated Roof
Roof Extender	ER-RE-200	Roof Hook Extender (Reduction Factor)
Hanger Bolt	ER-HB-10/200A	Hanger Bolt M10*200mm
Hanger Bolt	ER-HB-MP/8/150EP	Hanger Bolt for metal purlin M8*150mm
Hanger Bolt	ER-HB-8/150	Hanger Bolt for timber purlin M8*150mm
Inter Clamp	ER-IC-STXX	Inter Clamp = clamp + Z-Module + bolt
End Clamp	ER-EC-STXX	End Clamp = clamp + Z-Module + bolt
Inter Clamp	ER-IC-STXX/G	Inter Clamp with Grounding Pins
Security Inter Clamp	ER-IC-STXX/S	Security Inter Clamp
Security End Clamp	ER-EC-STXX/S	Security End Clamp
Clamp	C-U/30/46-G	Akashi Clamp for Frame Height 30-46mm with Grounding Clip
Clamp	C-U/30/46	Akashi Clamp for Frame Height 30-46mm
Inter Clamp	ER-IC-STXXB	Inter Clamp XX Black
End Clamp	ER-EC-STXXB	End Clamp XX Black
Inter Clamp	ER-IC-STXXB/G	Black Inter Clamp with Grounding Pins
Clamp	C-U/30/46-G/BA	Black Akashi Clamp with grounding clip
Clamp	C-U/30/46/BA	Black Akashi Clamp
End Clamp	ER-EC-DU35/40	End Clamp dual 35 or 40mm
End Clamp	ER-EC-DU40/46	End Clamp dual 40 or 46mm
End Clamp (*)	EC-FL/GE/XX/XX	End Clamp for Frameless Module (glued EPDM)
Inter Clamp (*)	IC-FL/GE/XX/XX	Inter Clamp for Frameless Module (glued EPDM)
End Clamp (*)	ER-EC-FL/XX/XX	End Clamp for Frameless Module
Inter Clamp (*)	ER-IC-FL/XX/XX	Inter Clamp for Frameless Module
Black End Clamp (*)	EC-FL/GE/XX/XX/B	Black End Clamp for Frameless Module (glued EPDM)
Black Inter Clamp (*)	IC-FL/GE/XX/XX/B	Black Inter Clamp for Frameless Module (glued EPDM)

(*) Subject to the panel manufacturer's installation guide.

Tin Flush and Tilt Mount Certification Letter

MW Engineering
Melbourne

CIVIL & STRUCTURAL ENGINEERS
RESIDENTIAL - INDUSTRIAL - COMMERCIAL - PRODUCT DEVELOPMENT
info@mwengineering.melbourne
Phone: 1300 MWENG-0 (1300 69364-0)
www.mwengineering.melbourne
ABN 37 605 815 585

13 September 2023

Clenergy Australia
1/10 Duerdin Street
Clayton, VIC 3168

CERTIFICATION LETTER

Clenergy PV-ezRack SolarRoof Penetrative Flush and Tilt interface certification (Elite Rail) – TC 2, 2.5, 3 - Wind Region A, B1, B2 C and D Internal REF: **00606-ELT-1** . Project REF: **CL-1168-Y.REV.1.**

MW Engineering Melbourne, being Structural Engineers within the meaning of Australian regulations, have calculated the maximum spacings for the PV ez-Rack rail system for the following conditions:

- **Wind Loads to AS 1170.2-2021**
  - **Wind Terrain Category 2, 2.5 and 3**
  - **Wind average recurrence of 200 years**
  - **Wind Region A, B1, B2, C and D**
- **Solar panel length up to 2.4 m**
- **Solar panel width up to 1.2 m**

Attached are the tables showing the spacings according to Wind Region, roof pitch, and building height.

The values shown on these tables will be valid unless an amendment is issued on any of the following codes:

- **AS/NZS 1170.0- 2002 AMDT 4-2016**	**General Principles**
- **AS/NZS 1170.1- 2002 AMDT 4-2016**	**Imposed Loadings**
- **AS/NZS 1170.2- 2021**	**Wind Loadings**
- **AS/NZS 1664.1- 1997 AMDT 1:1999**	**Aluminium Code**

Should you have any queries, do not hesitate to contact us.

Best Regards,

Alberto Escobar
Civil/Structural Engineer
BEng MIEAust NER
PE 0003615
RPEQ 18759
BDC 3134
BPB (NT) 262228ES
BSP (TAS) 845530344
info@mwengineering.melbourne

September 2023

STRUCTURAL DESIGN CERTIFICATION

Penetrative Flush and Tilt Interface spacing tables (Elite Rail)

Standard: AS/NZS 1170.2:2021
Terrain Category: 2, 2.5 & 3
Topographic Multiplier: 1

Client: Clenergy Australia

REF: 00606-ELT-1

Date: SEPTEMBER 2023

Clenergy reference: CL-1168-Y-REV 1

Project: PV-ezRack SolarRoof Penetrative Flush and Tilt interface spacing tables Elite- Rail

Australian Standards

National Construction Code	**Section B**
AS/NZS 1170.0:2002 (R2016)	**General Principles**
AS/NZS 1170.1:2002 (R2016)	**Imposed Loadings**
AS/NZS 1170.2:2021	**Wind Loadings**
AS/NZS 1664.1:1997-Amdt 1:1999	**Aluminium**

Rail type: ELITE-RAIL

Wind Terrain Category: 2, 2.5 & 3

Wind average recurrence: 200 years

This engineering document was designed to cater for most common installation scenarios defined with an importance level 2 (200 years wind average recurrence) such as residential shed or garage, small - isolated warehouses and farm sheds, residential carports, and one or double storey dwelling. If the project conditions do not fit on the above criteria, please contact Clenergy for an assessment.

From 1 May 2023 installers must follow AS/NZS1170.2:2021 only.

Designed: AE

Date: August 2023

Disclaimer: From the date of publication onwards, any amendment made to any of the above-mentioned Standards will make this report outdated and a new one will have to be released, unless the amendment has no implications on this certificate.

PV-ezRack SolarRoof Interface spacing table

Type of Rail	ER-R-ELT (Elite Rail)
Type of Interface	ER-I-05 (Tin Interface)
Solar Panel Dimension	2.1 m x 1 m (Refer to **25 & 26** for other panel sizes)

ANGLE TO THE HORIZONTAL	0° < α ≤ 10°																			
TC	3																			
BUILDING HEIGHT (m)	≤ 5				5<H≤10				10<H≤15				15<H≤20				20<H≤30			
Wind Region	Internal	Inmt	Edge	Corner	Internal	Inmt	Edge	Corner	Internal	Inmt	Edge	Corner	Internal	Inmt	Edge	Corner	Internal	Inmt	Edge	Corner
A	1941	1810	1650	1600	1941	1800	1700	1560	1836	1700	1700	1500	1761	1528	1421	1283	1679	1461	1359	1228
B1	1709	1472	1362	1225	1709	1472	1362	1225	1623	1400	1297	1127	1558	1347	1248	1006	1490	1289	1195	886
B2	1648	1421	1316	1177	1648	1421	1316	1177	1565	1352	1253	1019	1504	1300	1206	910	1438	1246	1155	802
C	1047	907	841	605	1047	907	841	605	854	740	682	449	821	712	609	402	655	569	447	295
D	930	808	652	431	930	808	652	431	759	652	485	320	731	582	433	287	584	427	318	211

ANGLE TO THE HORIZONTAL	0° < α ≤ 10°																			
TC	2.5																			
BUILDING HEIGHT (m)		≤ 5				5<H≤10				10<H≤15				15<H≤20				20<H≤30		
Wind Region	Internal	Inmt	Edge	Corner	Internal	Inmt	Edge	Corner	Internal	Inmt	Edge	Corner	Internal	Inmt	Edge	Corner	Internal	Inmt	Edge	Corner
A	1870	1618	1600	1500	1850	1700	1601	1503	1800	1650	1610	1410	1667	1450	1349	1219	1607	1401	1305	1163
B1	1650	1423	1318	1179	1590	1373	1272	1064	1523	1317	1221	944	1479	1280	1187	868	1428	1237	1148	786
B2	1592	1374	1273	1068	1534	1326	1229	962	1470	1272	1180	854	1428	1237	1148	786	1379	1196	1079	711
C	1012	877	813	550	977	847	751	496	803	697	571	377	781	677	526	347	629	533	397	262
D	900	782	592	391	869	718	534	354	715	545	406	269	695	502	374	248	561	379	283	187

ANGLE TO THE HORIZONTAL	0° < α ≤ 10°																			
TC	2																			
BUILDING HEIGHT (m)		≤ 5				5<H≤10				10<H≤15				15<H≤20				20<H≤30		
Wind Region	Internal	Inmt	Edge	Corner	Internal	Inmt	Edge	Corner	Internal	Inmt	Edge	Corner	Internal	Inmt	Edge	Corner	Internal	Inmt	Edge	Corner
A	1805	1565	1455	1312	1679	1461	1359	1228	1619	1410	1313	1181	1585	1382	1287	1119	1544	1347	1255	1038
B1	1596	1378	1277	1076	1490	1289	1195	886	1438	1246	1155	802	1409	1221	1133	757	1373	1191	1065	703
B2	1540	1331	1234	973	1438	1246	1155	802	1389	1203	1101	725	1361	1180	1039	685	1326	1151	963	636
C	980	850	760	501	917	796	626	413	760	652	485	320	745	616	458	303	605	476	354	235
D	872	726	540	357	817	598	445	295	677	464	346	229	664	438	326	217	514	339	253	168

PV-ezRack SolarRoof Interface spacing table (Cont.)

Type of Rail	ER-R-ELT (Elite Rail)
Type of Interface	ER-I-05 (Tin Interface)
Solar Panel Dimension	2.1 m x 1 m (Refer to **25 & 26**for other panel sizes)

ANGLE TO THE HORIZONTAL	10° < α < 15°																			
TC	3																			
BUILDING HEIGHT (m)	≤ 5				5<H≤10				10<H≤15				15<H≤20				20<H≤30			
Wind Region	Internal	Inmt	Edge	Corner	Internal	Inmt	Edge	Corner	Internal	Inmt	Edge	Corner	Internal	Inmt	Edge	Corner	Internal	Inmt	Edge	Corner
A	1736	1508	1402	1266	1736	1508	1402	1266	1646	1434	1335	1206	1581	1378	1284	1110	1510	1319	1229	977
B1	1538	1329	1232	969	1538	1329	1232	969	1462	1265	1173	840	1405	1218	1130	751	1345	1166	1003	662
B2	1485	1285	1191	877	1485	1285	1191	877	1411	1223	1135	760	1357	1177	1030	679	1299	1128	907	599
C	946	820	685	452	946	820	685	452	772	670	508	336	743	611	454	301	593	448	334	221
D	842	655	487	323	842	655	487	323	688	486	362	240	659	434	324	215	484	319	238	158

ANGLE TO THE HORIZONTAL	10° < α < 15°																			
TC	2.5																			
BUILDING HEIGHT (m)	≤ 5				5<H≤10				10<H≤15				15<H≤20				20<H≤30			
Wind Region	Internal	Inmt	Edge	Corner	Internal	Inmt	Edge	Corner	Internal	Inmt	Edge	Corner	Internal	Inmt	Edge	Corner	Internal	Inmt	Edge	Corner
A	1675	1458	1356	1225	1613	1406	1308	1174	1545	1348	1256	1041	1500	1310	1221	957	1448	1266	1180	866
B1	1486	1286	1193	880	1433	1241	1152	794	1374	1192	1068	705	1336	1158	983	649	1291	1120	890	587
B2	1435	1243	1152	796	1384	1200	1090	718	1328	1152	966	637	1290	1120	889	587	1248	1082	805	532
C	915	795	622	410	883	753	560	370	727	572	426	282	706	527	392	260	570	398	297	197
D	815	594	442	293	787	536	399	265	617	407	304	202	568	375	280	185	429	284	212	141

ANGLE TO THE HORIZONTAL	10° < α < 15°																			
TC	2																			
BUILDING HEIGHT (m)	≤ 5				5<H≤10				10<H≤15				15<H≤20				20<H≤30			
Wind Region	Internal	Inmt	Edge	Corner	Internal	Inmt	Edge	Corner	Internal	Inmt	Edge	Corner	Internal	Inmt	Edge	Corner	Internal	Inmt	Edge	Corner
A	1620	1411	1313	1182	1510	1319	1229	977	1458	1275	1188	884	1428	1249	1165	834	1392	1218	1136	774
B1	1439	1246	1155	803	1345	1166	1003	662	1299	1128	907	599	1274	1106	857	565	1242	1068	795	525
B2	1390	1204	1102	726	1299	1128	907	599	1255	1091	820	542	1231	1041	774	513	1200	966	719	475
C	886	762	566	375	830	627	467	309	688	487	362	240	674	459	342	227	539	355	265	176
D	790	542	404	267	677	447	333	221	524	347	259	172	495	327	244	162	383	254	189	126

PV-ezRack SolarRoof Interface spacing tables (Cont.)

Type of Rail	ER-R-ELT (Elite Rail)
Type of Interface	ER-I-05 (Tin Interface)
Solar Panel Dimension	2.1 m x 1 m (Refer to **25 & 26**for other panel sizes)

ANGLE TO THE HORIZONTAL	α = 15°																			
TC	3																			
BUILDING HEIGHT (m)	≤ 5				5<H≤10				10<H≤15				15<H≤20				20<H≤30			
Wind Region	Internal	Inmt	Edge	Corner	Internal	Inmt	Edge	Corner	Internal	Inmt	Edge	Corner	Internal	Inmt	Edge	Corner	Internal	Inmt	Edge	Corner
A	1659	1443	1344	1214	1659	1443	1344	1214	1574	1374	1279	1098	1512	1321	1230	981	1446	1264	1179	863
B1	1472	1274	1182	857	1472	1274	1182	857	1400	1213	1126	743	1347	1168	1006	664	1289	1119	886	585
B2	1421	1231	1142	775	1421	1231	1142	775	1352	1173	1019	672	1300	1129	910	601	1246	1078	802	530
C	907	787	605	400	907	787	605	400	740	604	449	297	712	539	402	266	569	396	295	196
D	808	578	431	286	808	578	431	286	652	430	320	212	582	384	287	190	427	282	211	140

ANGLE TO THE HORIZONTAL	α = 15°																			
TC	2.5																			
BUILDING HEIGHT (m)	≤ 5				5<H≤10				10<H≤15				15<H≤20				20<H≤30			
Wind Region	Internal	Inmt	Edge	Corner	Internal	Inmt	Edge	Corner	Internal	Inmt	Edge	Corner	Internal	Inmt	Edge	Corner	Internal	Inmt	Edge	Corner
A	1601	1396	1300	1151	1543	1346	1254	1037	1478	1292	1204	919	1435	1255	1170	846	1386	1213	1132	766
B1	1423	1233	1144	778	1373	1190	1064	702	1317	1143	944	622	1280	1111	868	573	1237	1057	786	519
B2	1374	1192	1068	704	1326	1151	962	635	1272	1104	854	564	1237	1056	786	519	1196	956	711	470
C	877	739	550	363	847	665	496	328	697	506	377	250	677	466	347	230	533	352	262	174
D	782	525	391	260	718	474	354	235	545	361	269	178	502	332	248	164	379	251	187	125

ANGLE TO THE HORIZONTAL	α = 15°																			
TC	2																			
BUILDING HEIGHT (m)	≤ 5				5<H≤10				10<H≤15				15<H≤20				20<H≤30			
Wind Region	Internal	Inmt	Edge	Corner	Internal	Inmt	Edge	Corner	Internal	Inmt	Edge	Corner	Internal	Inmt	Edge	Corner	Internal	Inmt	Edge	Corner
A	1548	1351	1259	1049	1446	1264	1179	863	1396	1222	1140	781	1368	1198	1113	737	1333	1168	1033	684
B1	1378	1195	1076	710	1289	1119	886	585	1246	1078	802	530	1221	1017	757	501	1191	944	703	465
B2	1331	1154	973	642	1246	1078	802	530	1203	975	725	480	1180	920	685	453	1151	854	636	421
C	850	673	501	331	796	554	413	274	652	430	320	212	616	406	303	201	476	314	235	156
D	726	479	357	237	598	395	295	196	464	307	229	152	438	290	217	143	339	224	168	111

PV-ezRack SolarRoof Interface spacing tables (Cont.)

Type of Rail	ER-R-ELT (Elite Rail)
Type of Interface	ER-I-05 (Tin Interface)
Solar Panel Dimension	2.1 m x 1 m (Refer to **25 & 26**for other panel sizes)

ANGLE TO THE HORIZONTAL	15° < α ≤ 20°																			
TC	3																			
BUILDING HEIGHT (m)	≤ 5				5<H≤10				10<H≤15				15<H≤20				20<H≤30			
Wind Region	Internal	Inmt	Edge	Corner	Internal	Inmt	Edge	Corner	Internal	Inmt	Edge	Corner	Internal	Inmt	Edge	Corner	Internal	Inmt	Edge	Corner
A	1520	1327	1236	994	1520	1327	1236	994	1444	1263	1177	860	1388	1215	1133	769	1329	1164	1022	677
B1	1352	1173	1019	672	1352	1173	1019	672	1288	1117	883	583	1239	1061	789	521	1187	934	696	461
B2	1306	1134	922	609	1306	1134	922	609	1244	1074	799	528	1198	959	714	472	1147	845	629	417
C	834	638	475	314	834	638	475	314	682	473	353	234	642	424	316	209	471	311	232	154
D	688	454	339	225	688	454	339	225	511	338	252	167	457	302	226	150	336	222	166	110

ANGLE TO THE HORIZONTAL	15° < α ≤ 20°																			
TC	2.5																			
BUILDING HEIGHT (m)	≤ 5				5<H≤10				10<H≤15				15<H≤20				20<H≤30			
Wind Region	Internal	Inmt	Edge	Corner	Internal	Inmt	Edge	Corner	Internal	Inmt	Edge	Corner	Internal	Inmt	Edge	Corner	Internal	Inmt	Edge	Corner
A	1468	1283	1196	902	1416	1239	1154	812	1357	1189	1089	721	1319	1156	1001	664	1275	1118	907	602
B1	1308	1136	925	611	1262	1097	834	552	1212	995	740	490	1178	915	681	451	1140	829	617	409
B2	1264	1098	837	553	1220	1014	755	499	1171	900	670	443	1139	828	616	409	1102	750	559	370
C	808	579	431	286	780	522	389	258	602	397	296	196	554	365	273	181	418	276	206	137
D	624	412	308	204	563	372	278	184	428	283	212	140	394	261	195	130	298	197	148	98

ANGLE TO THE HORIZONTAL	15° < α ≤ 20°																			
TC	2																			
BUILDING HEIGHT (m)	≤ 5				5<H≤10				10<H≤15				15<H≤20				20<H≤30			
Wind Region	Internal	Inmt	Edge	Corner	Internal	Inmt	Edge	Corner	Internal	Inmt	Edge	Corner	Internal	Inmt	Edge	Corner	Internal	Inmt	Edge	Corner
A	1421	1244	1159	822	1329	1164	1022	677	1284	1125	924	613	1258	1104	873	579	1226	1076	809	538
B1	1267	1101	844	558	1187	934	696	461	1147	845	629	417	1125	798	594	394	1097	740	552	366
B2	1225	1026	763	505	1147	845	629	417	1108	764	570	377	1088	721	538	357	1015	670	500	331
C	783	528	393	261	659	435	325	216	511	338	252	167	482	319	238	158	374	247	185	123
D	569	377	281	186	470	311	232	154	364	241	181	120	344	228	170	113	266	177	132	88

PV-ezRack SolarRoof Interface spacing tables (Cont.)

Type of Rail	ER-R-ELT (Elite Rail)
Type of Interface	ER-I-05 (Tin Interface)
Solar Panel Dimension	2.1 m x 1 m (Refer to **25 & 26**for other panel sizes)

ANGLE TO THE HORIZONTAL	20° < α < 30°																			
TC	3																			
BUILDING HEIGHT (m)	≤ 5				5<H≤10				10<H≤15				15<H≤20				20<H≤30			
Wind Region	Internal	Inmt	Edge	Corner	Internal	Inmt	Edge	Corner	Internal	Inmt	Edge	Corner	Internal	Inmt	Edge	Corner	Internal	Inmt	Edge	Corner
A	1418	1241	1156	816	1418	1241	1156	816	1349	1181	1068	708	1297	1137	954	633	1241	1089	839	558
B1	1264	1098	838	554	1264	1098	838	554	1204	975	726	480	1159	871	649	430	1110	767	572	379
B2	1222	1018	758	501	1222	1018	758	501	1164	882	657	435	1120	789	588	389	1054	695	518	343
C	781	524	391	259	781	524	391	259	590	389	290	193	527	349	260	173	387	256	191	127
D	566	374	279	186	566	374	279	186	420	278	208	138	376	249	186	124	276	183	137	91

ANGLE TO THE HORIZONTAL	20° < α < 30°																			
TC	2.5																			
BUILDING HEIGHT (m)	≤ 5				5<H≤10				10<H≤15				15<H≤20				20<H≤30			
Wind Region	Internal	Inmt	Edge	Corner	Internal	Inmt	Edge	Corner	Internal	Inmt	Edge	Corner	Internal	Inmt	Edge	Corner	Internal	Inmt	Edge	Corner
A	1371	1200	1119	741	1322	1158	1008	668	1268	1113	894	593	1233	1083	823	547	1192	996	745	495
B1	1223	1022	760	503	1181	921	686	454	1134	817	609	403	1103	753	561	371	1033	681	509	337
B2	1182	924	688	456	1142	833	621	412	1097	740	552	366	1032	681	508	336	935	616	461	305
C	722	476	355	235	650	430	321	213	494	327	244	162	455	301	225	149	344	228	170	113
D	513	340	253	169	463	307	229	152	352	233	175	116	325	215	161	107	245	163	122	81

ANGLE TO THE HORIZONTAL	20° < α < 30°																			
TC	2																			
BUILDING HEIGHT (m)	≤ 5				5<H≤10				10<H≤15				15<H≤20				20<H≤30			
Wind Region	Internal	Inmt	Edge	Corner	Internal	Inmt	Edge	Corner	Internal	Inmt	Edge	Corner	Internal	Inmt	Edge	Corner	Internal	Inmt	Edge	Corner
A	1328	1163	1020	676	1241	1089	839	558	1200	1016	760	505	1177	958	718	477	1147	889	666	443
B1	1186	932	694	459	1110	767	572	379	1054	695	518	343	995	656	489	324	922	609	455	302
B2	1146	843	628	416	1054	695	518	343	953	629	469	312	900	594	443	294	834	552	412	273
C	658	434	324	215	542	358	267	178	421	278	208	138	397	263	196	130	307	204	152	101
D	468	310	232	154	386	256	191	127	300	199	149	99	283	188	140	94	219	146	109	73

PV-ezRack SolarRoof Interface spacing tables (Cont.)

Type of Rail	ER-R-ELT (Elite Rail)
Type of Interface	ER-I-05 (Tin Interface)
Solar Panel Dimension	2.1 m x 1 m (Refer to **25 & 26** for other panel sizes)

ANGLE TO THE HORIZONTAL	α = 30°																			
TC	3																			
BUILDING HEIGHT (m)	≤ 5				5<H≤10				10<H≤15				15<H≤20				20<H≤30			
Wind Region	Internal	Inmt	Edge	Corner	Internal	Inmt	Edge	Corner	Internal	Inmt	Edge	Corner	Internal	Inmt	Edge	Corner	Internal	Inmt	Edge	Corner
A	1338	1173	1045	693	1338	1173	1045	693	1274	1117	905	601	1226	1076	809	537	1174	953	713	473
B1	1196	955	711	470	1196	955	711	470	1139	827	616	408	1097	740	552	366	988	652	486	322
B2	1155	863	643	426	1155	863	643	426	1101	749	558	369	1014	669	499	331	893	590	440	292
C	674	445	332	221	674	445	332	221	500	331	247	164	448	296	221	147	329	218	163	108
D	480	318	237	158	480	318	237	158	356	236	176	117	319	211	158	105	235	156	117	78

ANGLE TO THE HORIZONTAL	α = 30°																			
TC	2.5																			
BUILDING HEIGHT (m)	≤ 5				5<H≤10				10<H≤15				15<H≤20				20<H≤30			
Wind Region	Internal	Inmt	Edge	Corner	Internal	Inmt	Edge	Corner	Internal	Inmt	Edge	Corner	Internal	Inmt	Edge	Corner	Internal	Inmt	Edge	Corner
A	1294	1135	949	629	1249	1096	855	567	1199	1014	759	504	1165	933	698	465	1127	845	633	421
B1	1156	866	646	427	1117	781	582	386	1052	694	517	343	967	639	476	316	876	578	432	286
B2	1118	784	584	387	1073	708	527	350	951	628	468	311	875	578	431	286	793	524	391	260
C	612	404	302	200	552	365	272	181	419	278	208	138	386	256	191	127	292	194	145	96
D	436	288	216	144	393	260	195	130	299	199	148	98	276	183	137	91	209	138	104	69

ANGLE TO THE HORIZONTAL	α = 30°																			
TC	2																			
BUILDING HEIGHT (m)	≤ 5				5<H≤10				10<H≤15				15<H≤20				20<H≤30			
Wind Region	Internal	Inmt	Edge	Corner	Internal	Inmt	Edge	Corner	Internal	Inmt	Edge	Corner	Internal	Inmt	Edge	Corner	Internal	Inmt	Edge	Corner
A	1254	1100	865	574	1174	953	713	473	1135	861	644	429	1113	813	608	406	1085	755	566	376
B1	1121	790	589	390	988	652	486	322	893	590	440	292	843	557	416	275	782	517	386	257
B2	1084	715	533	354	893	590	440	292	809	534	399	265	762	505	376	250	708	468	350	232
C	558	369	276	183	460	305	228	151	357	236	177	118	337	223	167	111	261	173	130	86
D	398	263	197	131	328	218	163	109	255	169	127	84	241	160	119	79	187	124	93	62

General Notes

Note 1. This engineering document was designed to cater for most common installation scenarios however, it does not cater for all of them. Contact Clenergy if you are unable to comply with any of the installation specifications listed on this document.

Note 2. This certificate covers both tilted and flush installations. For flush systems this document is limited installations where h/d or h/b > 0.5. Refer to flush systems documents for installations out of the h/d or h/b condition. Contact Clenergy if you are unable to comply with any of the installation specifications listed on this document.

Note 3. The spacing information in this document has been designed to be compliant with the capacity of the below items:

- Mounting system components, including the fixings, capacity and rail deflection.
- Buildex- 14 - 11 x 70 Hex Head Zips with 16 mm Aluminium Bonded Washer.

Note 4. This certificate <u>only</u> covers the assessment of the Clenergy PV mounting system, including the components listed on note 2 and 12. Assessment of the roof structure, PV panels and other fixings are to be checked by the installer/contractor, if necessary.

Note 5. For tilt legs roof pitch between 0° and < 10° when rails run parallel to the roof pitch (Figure 1) and 0° and < 22° when rails run perpendicular to the roof pitch (Figure 2).

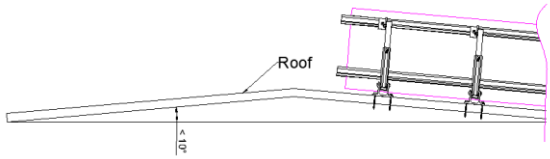

Figure 1. Rails running parallel to roof pitch

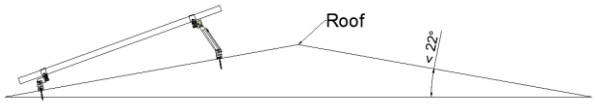

Figure 2. Rails running perpendicular to roof pitch

Note 6. Fixing spacings were calculated using **two screws** per tilt leg on Steel Purlins G450 1.5mm and 35 mm Timber F7 (Pine).

Note 7. Reduction factors using **one screw** per tilt leg and depending on the type of tophat, purlin or batten as per the below table. Screw must be located on central hole.

Purlin Material	Purlin thickness (mm)	Min. embedment (mm)	Spacing +/- (WR A)	Spacing +/- (WR B1)	Spacing +/- (WR B2)	Spacing +/- (WR C)	Spacing +/- (WR D)
Timber (Pine F7)	-	25	-65%	-65%	-85%	Contact Clenergy	Contact Clenergy
Timber (Pine F7)	-	30	-40%	-40%	-75%	-75%	Contact Clenergy
Timber (Pine F7)	-	35	-20%	-25%	-50%	-50%	-85%
Timber (Hardwood F17)	-	25	-5%	-5%	-15%	-15%	-40%
Timber (Hardwood F17)	-	30	-	-	-5%	-5%	-20%
Timber (Hardwood F17)	-	35	-	-	-5%	-5%	-20%
Metal (G550)	0.42		Contact Clenergy	Contact Clenergy	Contact Clenergy	Contact Clenergy	Contact Clenergy
Metal (G550)	0.48		Contact Clenergy	Contact Clenergy	Contact Clenergy	Contact Clenergy	Contact Clenergy
Metal (G550)	0.55		Contact Clenergy	Contact Clenergy	Contact Clenergy	Contact Clenergy	Contact Clenergy
Metal (G550)	0.75		-90%	Contact Clenergy	Contact Clenergy	Contact Clenergy	Contact Clenergy
Metal (G450)	1.2		-75%	-80%	-90%	Contact Clenergy	Contact Clenergy
Metal (G450)	1.5		-45%	-50%	-50%	-50%	-65%
Metal (G450)	1.9		-	-	-5%	-5%	-20%
Metal (G450)	2.4		-	-	-5%	-5%	-10%

Note 8. Increase or reduction factors using **two screws** per tilt leg and depending on the type of tophat, purlin or batten as per the below table.

Purlin Material	Purlin thickness (mm)	Min. embedment (mm)	Spacing +/- (WR A)	Spacing +/- (WR B1)	Spacing +/- (WR B2)	Spacing +/- (WR C)	Spacing +/- (WR D)
Timber (Pine F7)	-	25	-	-5%	-9%	-10%	-10%
Timber (Pine F7)	-	30	-	-5%	-9%	-10%	-10%
Timber (Pine F7)	-	35	-	-	-	-	-
Timber (Hardwood F17)	-	25	-	-	+10%	+5%	+4%
Timber (Hardwood F17)	-	30	-	-	+10%	+5%	+4%
Timber (Hardwood F17)	-	35	-	-	+20%	+10%	+5%
Metal (G550)	0.42	-	-80%	-80%	Contact Clenergy	Contact Clenergy	Contact Clenergy
Metal (G550)	0.48	-	-40%	-60%	-60%	-70%	-85%
Metal (G550)	0.55	-	-25%	-30%	-50%	-55%	-70%
Metal (G550)	0.75	-	-12%	-15%	-20%	-25%	-45%
Metal (G450)	1.2	-	-5%	-10%	-10%	-15%	-20%
Metal (G450)	1.5	-	-	-	-	-	-
Metal (G450)	1.9	-	-	-	+10%	+5%	+5%
Metal (G450)	2.4	-	-	-	+10%	+5%	+5%

Note 9. If any of the screws of the interfaces go into pre-existing holes, they will have to be one size up compared to the screws that were previously installed. This is to ensure that the pullout capacity remains the same or higher.

Note 10. The most conservative spacing has to be used if one panel or panel row fall between two roof zones.

Note 11. Minimum purlin steel grade to be G450 and timber grade members: F7 (Pine) and F17 (Hardwood).

Note 12. In case the installation is done with one screw and the purlin thickness differs from Note 6, a site-specific certificate shall be issued. Contact Clenergy for more information.

Note 13. For Terrain Category (TC) definition. Refer to clause 4.2.1 of AS/NZS 1170.2:2021 for more information.

Note 14. Topographic Multiplier (Mt) taken as 1.0. Refer to clause 4.4 of AS/NZS 1170.2:2021 for more information.

For topographic Multiplier (Mt) more than 1.0 (installations on a mountain, hilly or sloped terrain) please refer to clause 4.4 of AS/NZS 1170.2:2021 to define appropriate Topographic multiplier value.

The below table provides a reduction factor applied for topographic multipliers greater than 1 (installation on a slope, hill on mountain). To achieve a more accurate and cost-effective design and installation in wind region C & D, please contact Clenergy Engineering department.

Mt	A, B1, B2			
	Internal	Intermediate	Edge	Corner
1	1	1	1	1
1.02	0.93	1	0.86	1
1.03	0.93	0.89	0.86	1
1.04	0.93	0.89	0.86	1
1.06	0.86	0.89	0.86	1
1.08	0.86	0.89	0.86	1
1.09	0.79	0.78	0.71	0.75
1.1	0.79	0.78	0.71	0.75
1.2	0.64	0.67	0.57	0.75
1.3	0.57	0.56	0.57	0.50
1.4	0.50	0.44	0.43	0.50
1.5	0.43	0.44	0.43	0.50

Note 15. Shielding Multiplier (Ms) taken as 1.0. Refer to clause 4.3 of AS/NZS 1170.2:2021 for more information.

Note 16. Wind Direction Multiplier (Md) taken as 1.0. Refer to clause 3.3 of AS/NZS 1170.2:2021 for more information.

Note 17. Clamping zone of the PV panels should be according to the manufacturer's specifications.

Note 18. Capacities checked and compared against testing data from Clenergy Australia and NATA certified testing.

Note 19. Rail overhang ends where the panel finishes and this should be less than 40% of the last installed interface spacing.

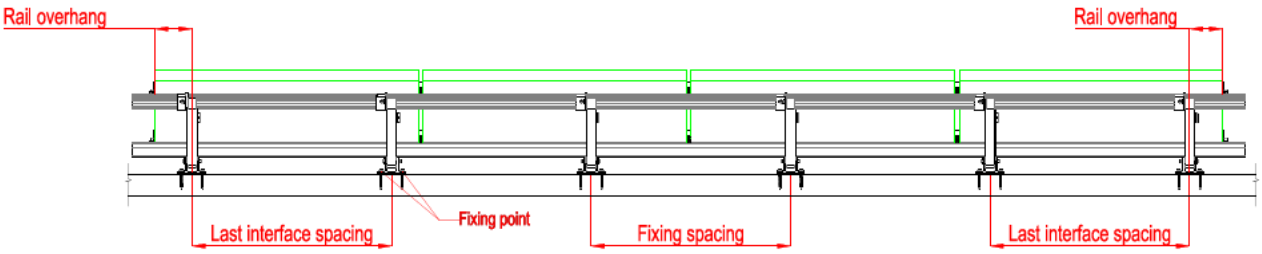

Note 20. From the date of publication onwards, any amendment made to any of the above-mentioned Standards will make this report outdated and a new one will have to be released, unless the amendment has no implications on this certificate.

Note 21. All components from Clenergy must be installed according to manufacturer's specification and the instructions shown in the relevant installation manual. Please check the Clenergy Australia website or contact them for access to the most recent installation manuals.

Note 22. Only hip and gable roofs installations are covered on this certificate. Contact Clenergy if you are planning to install on a different roof type such as curved, multi-span (pitched and saw-tooth), mansard, circular bin, silo, tank, pitched free, troughed free, hypar free, canopy, awning and cantilivered roof.

Note 23. No consideration has been taken on the effect of snow loads. In case the roof is located in a snow prone area, a project specific design must be completed.

Note 24. No consideration has been taken on the effect of earthquake loads.

Note 25. This Engineering report is based on 2.1 m x 1 m panels and two rails per panel. However, a percentage increase could be applied on all interface spacings as shown on the following table when installing **flush interfaces**.

Number of rails per panel	Panel length (mm)	Spacing +/- W.R – A & B1	Spacing +/- W.R –B2 C & D
2 rails	≤ 1700	6%	10%
3 rails	≤ 1700	12%	18%
4 rails	≤ 1700	15%	20%
2 rails	≤ 1800	4%	7%
3 rails	≤ 1800	12%	18%
4 rails	≤ 1800	15%	20%
2 rails	≤ 1900	4%	7%
3 rails	≤ 1900	10%	15%
4 rails	≤ 1900	12%	18%
2 rails	≤ 2100	0%	0%
3 rails	≤ 2100	10%	15%
4 rails	≤ 2100	12%	18%
2 rails	≤ 2200	-12%	-12%
3 rails	≤ 2200	7%	12%
4 rails	≤ 2200	12%	18%
2 rails	≤ 2300	-16%	-12%
3 rails	≤ 2300	5%	12%
4 rails	≤ 2300	10%	15%
2 rails	≤ 2400	-19%	-15%
3 rails	≤ 2400	5%	10%
4 rails	≤ 2400	8%	12%

Note 26. This Engineering report is based on 2.1 m x 1 m panels and two rails per panel. However, a percentage increase could be applied on all interface spacings as shown on the following table when installing **tilt interfaces**.

Number of rails per panel	Panel length (mm)	Spacing +/- W.R – A & B1	Spacing +/- W.R – B2, C & D
2 rails	≤ 1700	+ 6 %	+ 10 %
2 rails	≤ 1800	+ 4 %	+ 7 %
2 rails	≤ 1900	0 %	+ 5 %
2 rails	≤ 2000	0 %	+ 5 %
2 rails	≤ 2100	0 %	0 %
2 rails	≤ 2200	- 10 %	- 6 %
2 rails	≤ 2300	- 18 %	- 12 %
2 rails	≤ 2400	- 20 %	- 12 %

Note 27. Panel width cannot exceed 1.20 m for any of the above panel length dimensions and panel weight cannot exceed 15 kg/m^2.

Note 28. Please refer to AS 4312 to find out about corrosion categories.

Note 29. Final tilt "**α**" identification as per below

<u>Standard tilt</u>

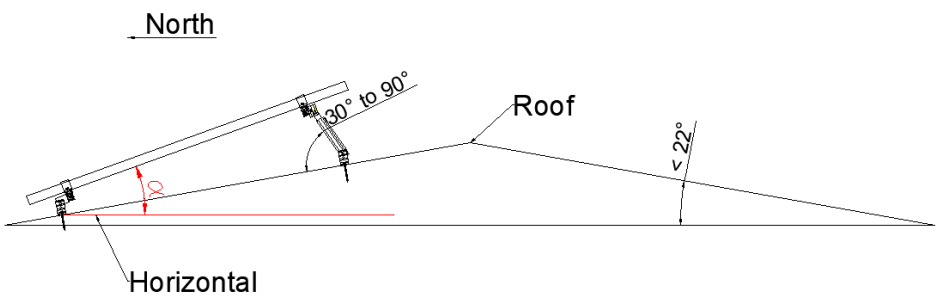

Back leg angle between 30° and 90°

Reverse tilt

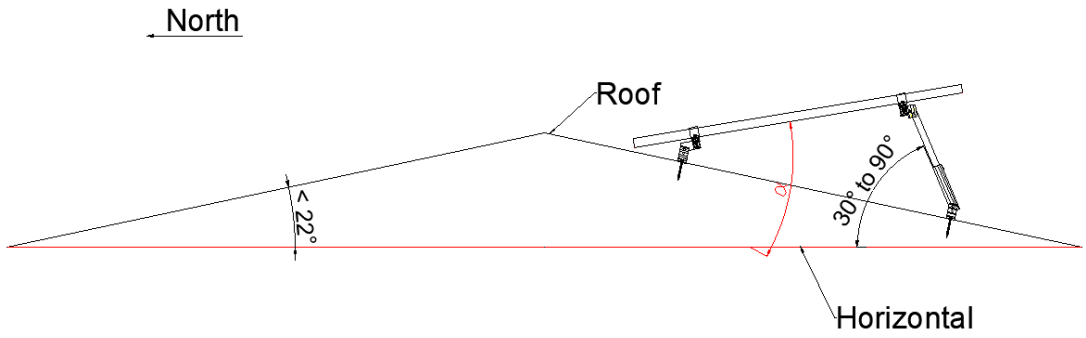

Back leg angle between 30° and 90°

Elite – Rail parallel to ribs

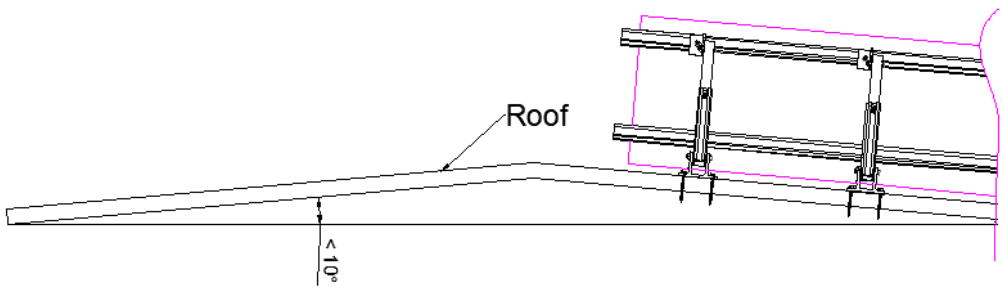

Back leg angle between 30° and 90°

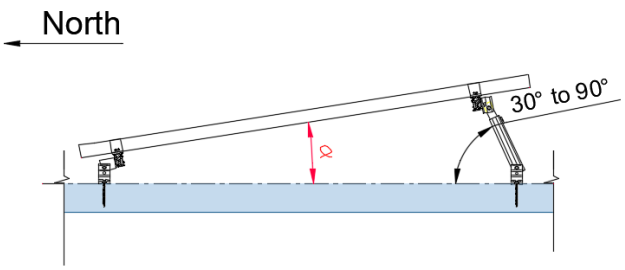

Note 30. This certificate can be used for the installation of tilt legs on uncracked concrete roofs using one Chemset per tilt leg. The minimum Chemset tensile capacity should be 6.1 kN and this should be confirmed by the manufacturer. As an example, installers can use M8 Chemset 101Plus by Ramset assuming a 20 MPa concrete strength and a depth of 80 mm. Please check that during the installation any reinforcement is not damaged.

Note 31. Roof Zone definition to be calculated as per below:

Step 1. Determine building height (h), width (b) and length (d).
Step 2. Check ratio of height to length/width (h/b and h/d)
If both h/b and h/d < 0.2, then a = 2h
Step 3. If h/b and h/d > 0.2 then a = the lowest value between h, 0.2b and 0.2d.
Step 4. Based on the roof pitch choose roof zone following the below

Example 1:

- Wind Region: A
- Terrain Category: 3
- Building Height: 10 m
- Building Dimensions: 52 x 56 m
- Roof Pitch: 3°
- Panel Tilt Angle: 5°
- Tilt Condition (Standard or Reverse): Standard
- No. of screws per tilt leg: 2 (refer to Note 6)
- Purlin type and thickness: 1.5 mm
- Panel Dimension: 2100mm x 1000mm

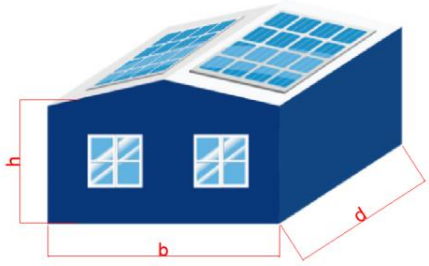

Step 1. Determine building height (10 m), width (52 m) and length (56 m). ✓
Step 2. Check ratio of height to length/width (h/b and h/d)
If both h/b and h/d < 0.2, then a = 2h 10/52= 0.19 ✓ 10/56 = 0.17 ✓ a = 2h
Step 3. If h/b and h/d > 0.2 then a = the lowest value between h, 0.2b and 0.2d. (does not apply for this example as both h/b and h/d < 0.2)
Step 4. Based on the roof pitch choose roof zone Appendix 1

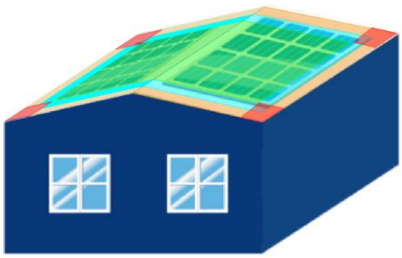

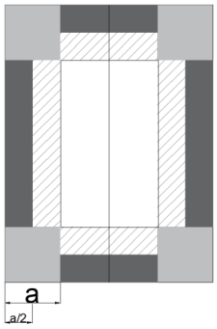

Fixing Spacing as per below (α=3°+5°=8°, see Note 30):

- Internal: 1941 mm
- Intermediate: 1810 mm
- Edge: 1650 mm
- Corner: 1600 mm

Appendix 1 - Roof zone definition

Roof Pitch < 10°

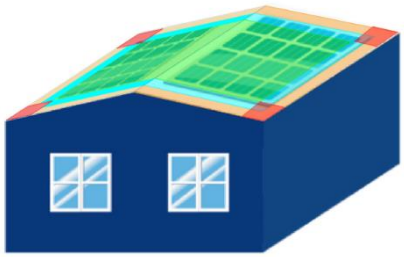

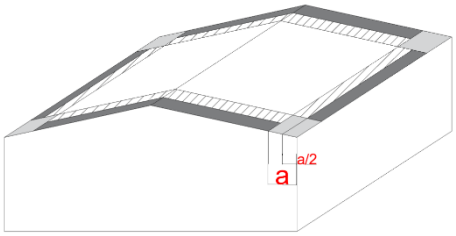

Top view

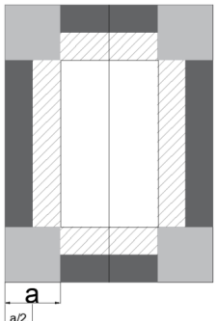

Flat/Mono – Slope Roof > 10°

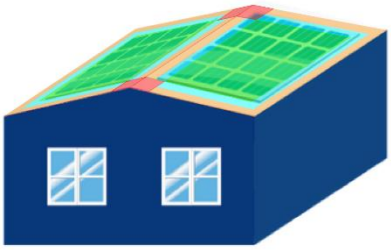

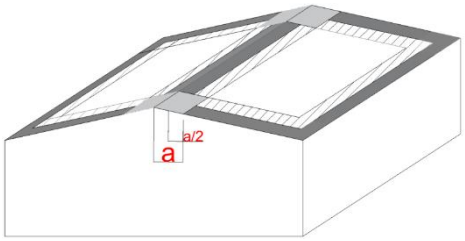

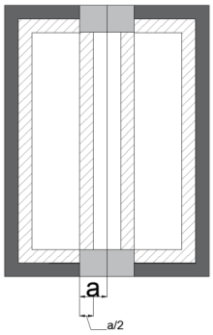

Flat/Mono – Slope Roof

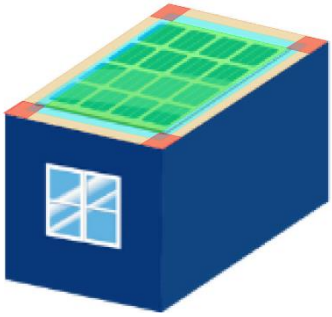

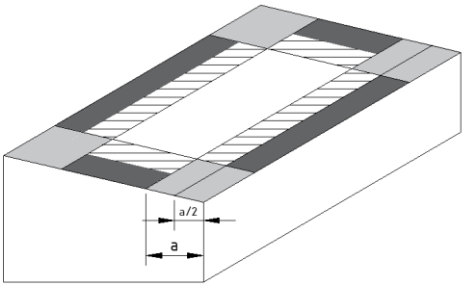

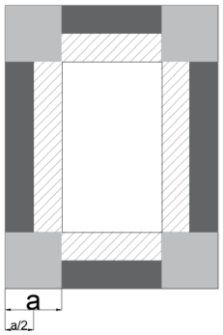

Legend:

- Internal
- Intermediate = "a/2"
- Edge = "a/2"
- Corner = "a"

Appendix 11 – Components list

The following components are satisfied for use according to AS/NZS 1664.1:1997-Amdt 1:1999 and AS/NZS 1170.2:2021.

Components	Part No.	Description
Elite Rail	ER-R-ELT/XXXX	Elite Rail
Splice	ER-SP-ECO	Splice
Elite Rail Black	ER-R-ELT/XXXX/BA	Elite-Rail Black
Splice	ER-SP-ECO/BA	Splice, Black
Flush Mount Interface	ER-I-05	Tin Interface
Flush Mount Interface	ER-I-05/BA	Tin Interface Black
Flush Mount Interface	ER-I-05/CM	Tin Interface with click module
Flush Mount Interface	ER-I-05A/EZC/ECO	Tin Interface with ezClick connection
Flush Mount Interface	ER-I-05/C5	Tin Interface with C5 rated Screw
Flush Mount Interface	ER-I-25	Tin Interface with Curved Base
Flush Mount Interface	EZ-AD-C43	Adapter (Puck) for Corrugated Roof
Flush Mount Interface	ER-I-25/BA	Black Tin Interface with Curved Base
Flush Mount Interface	EZ-AD-C43/BA	Black Adapter (Puck) for Corrugated Roof
Flush Mount Interface	EZ-AD-C110	Adapter for Corrugated Roof
Tilt Legs	ER-TL-10/15	10°/15° Adjustable Tilt Legs
Tilt Legs	ER-TL-15/30	15°/30° Adjustable Tilt Legs
Tilt Legs	ER-TL-30/60	30°/60° Adjustable Tilt Legs
Tilt Legs	ER-TL-10/15/PS	10°/15° Adjustable Tilt Legs, Preassembly
Tilt Legs	ER-TL-10/15/PS/C5	10°/15° Adjustable Tilt Legs, Preassembly, C5 rated screws
Tilt Legs	ER-TL-15/30/PS	15°/30° Adjustable Tilt Legs, Preassembly
Tilt Legs	ER-TL-15/30/PS/C5	15°/30° Adjustable Tilt Legs, Preassembly, C5 rated screws
Tilt Legs	TL-10/15/L/PS	10°/15° L Feet Adjustable Tilt Legs, Preassembly
Tilt Legs	TL-15/30/L/PS	15°/30° L Feet Adjustable Tilt Legs, Preassembly
Tilt Legs	ER-TL-5/PS	5° Fixed Tilt Legs, Preassembly
Tilt Legs	ER-TL-10/PS	10° Fixed Tilt Legs, Preassembly
Tilt Legs	ER-TL-FF	Front Foot of Tilt Legs
Black Tilt Legs	ER-TL-10/15/BA	Black 10°/15° Adjustable Tilt Legs
Black Tilt Legs	ER-TL-15/30/BA	Black 15°/30° Adjustable Tilt Legs
Inter Clamp	ER-IC-STXX	Inter Clamp = clamp + Z-Module + bolt
End Clamp	ER-EC-STXX	End Clamp = clamp + Z-Module + bolt
Inter Clamp	ER-IC-STXX/G	Inter Clamp with Grounding Pins
Security Inter Clamp	ER-IC-STXX/S	Security Inter Clamp
Security End Clamp	ER-EC-STXX/S	Security End Clamp
Clamp	C-U/30/46-G	Akashi Clamp for Frame Height 30-46mm with Grounding Clip
Clamp	C-U/30/46	Akashi Clamp for Frame Height 30-46mm
Inter Clamp	ER-IC-STXXB	Inter Clamp XX Black
End Clamp	ER-EC-STXXB	End Clamp XX Black
Inter Clamp	ER-IC-STXXB/G	Black Inter Clamp with Grounding Pins

Clamp	C-U/30/46-G/BA	Black Akashi Clamp with grounding clip
Clamp	C-U/30/46/BA	Black Akashi Clamp
End Clamp	ER-EC-DU35/40	End Clamp dual 35 or 40mm
End Clamp	ER-EC-DU40/46	End Clamp dual 40 or 46mm
End Clamp (*)	EC-FL/GE/XX/XX	End Clamp for Frameless Module (glued EPDM)
Inter Clamp (*)	IC-FL/GE/XX/XX	Inter Clamp for Frameless Module (glued EPDM)
End Clamp (*)	ER-EC-FL/XX/XX	End Clamp for Frameless Module
Inter Clamp (*)	ER-IC-FL/XX/XX	Inter Clamp for Frameless Module
Black End Clamp (*)	EC-FL/GE/XX/XX/B	Black End Clamp for Frameless Module (glued EPDM)
Black Inter Clamp (*)	IC-FL/GE/XX/XX/B	Black Inter Clamp for Frameless Module (glued EPDM)

(*) Subject to the panel manufacturer's installation guide.

Adjustable Tile Interface Certification Letter

MW Engineering
Melbourne

CIVIL & STRUCTURAL ENGINEERS
RESIDENTIAL - INDUSTRIAL - COMMERCIAL - PRODUCT DEVELOPMENT
info@mwengineering.melbourne
Phone: 1300 MWENG-0 (1300 69364-0)
www.mwengineering.melbourne
ABN 37 605 815 585

29 September 2023

Clenergy Australia
1/10 Duerdin Street
Clayton, VIC 3168

CERTIFICATION LETTER

Clenergy PV-ezRack Solar Roof Certification – TC2, 2.5, 3 – Wind Region A, B1 and B2. Internal REF: **00428.** Project REF: **CL-563-S-REV2.**

MW Engineering Melbourne, being Structural Engineers within the meaning of Australian regulations, have calculated the maximum spacings for the PV ez-Rack rail system for the following conditions:

- **Wind Loads to AS 1170.2-2021**
  - **Wind Terrain Category 2, 2.5 and 3**
  - **Wind average recurrence of 200 years**
  - **Wind Region A and B**
- **Solar panel length up to 2.1m**
- **Solar panel width up to 1.2m**

Attached are the tables showing the spacings according to Wind Region, roof pitch, and building height.

The values shown on these tables will be valid unless an amendment is issued on any of the following codes:

- **AS/NZS 1170.0- 2002 AMDT 4-2016** **General Principles**
- **AS/NZS 1170.1- 2002 AMDT 4-2016** **Imposed Loadings**
- **AS/NZS 1170.2- 2021** **Wind Loadings**
- **AS/NZS 1664.1- 1997 AMDT 1:1999** **Aluminium Code**

Should you have any queries, do not hesitate to contact us.

Best Regards,

Alberto Escobar
Civil/Structural Engineer
BEng MIEAust NER
PE 0003615
RPEQ 18759
BDC 3134
BPB (NT) 262228ES
BSP (TAS) 845530344
info@mwengineering.melbourne

September 2023

STRUCTURAL DESIGN CERTIFICATION

Adjustable Tile Interface spacing tables (ECO & ELITE RAILS)

Standard: AS/NZS 1170.2:2021

Terrain Category: 2, 2.5 & 3

Client: Clenergy Australia

REF: 00428

Date: SEPTEMBER 2023

Limitation: This report has been prepared for the exclusive use of Clenergy Australia, and is subject to and issued in connection with the provisions of the agreement between MW Engineering Melbourne and Clenergy Australia. MW Engineering Melbourne accepts no liability or responsibility whatsoever for any use of or reliance upon this report by any third party other than Clenergy's clients.

REF: 00428

Client: Clenergy Australia

Internal reference: CL- 563-S- REV 2

Project: PV-ezRack SolarRoof adjustable tile interface spacing tables

Australian Standards

AS/NZS 1170.0:2002 (R2016)	General Principles
AS/NZS 1170.1:2002 (R2016)	Imposed loadings
AS/NZS 1170.2:2021	Wind Loadings
AS/NZS 1664.1:1997-Amdt 1:1999	Aluminium

Wind Terrain Category: 2, 2.5 & 3

Wind average recurrence: 200 years

Designed: AE

Date: SEPTEMBER 2023

Disclaimer: From the date of publication onwards, any amendment made to any of the above-mentioned Standards will make this report outdated and a new one will have to be released, unless the amendment has no implications on this certificate.

PV-ezRack SolarRoof Interface spacing tables

Type of Rail	ER-R-ECO & ER-R-ELT (Refer to Note 4 for other compatible rails)
Type of Interface	ER-I-41/EZC/ECO (Rail running perpendicular to rafter, L-bracket facing back) – Note 30
Solar Panel Dimension	1.7 m x 1 m (Refer to Note 18 for other panel sizes)
Terrain Category	3

Roof Angle - 0° < α ≤ 10°

Wind Region	Building Height (m)									
	H ≤ 5		5 < H ≤ 10		10 < H ≤ 15		15 < H ≤ 20		20 < H ≤ 30	
	U.W & D.W	Central	U.W & D.W	Central	U.W & D.W	Central	U.W & D.W	Central	U.W & D.W	Central
A	1016	1466	986	1422	935	1349	925	1334	821	1194
B1	693	1084	636	995	570	892	523	817	447	697
B2	524	820	481	753	431	674	395	618	338	528

Roof Angle - 10° < α ≤ 20°

Wind Region	Building Height (m)									
	H ≤ 5		5 < H ≤ 10		10 < H ≤ 15		15 < H ≤ 20		20 < H ≤ 30	
	U.W & D.W	Central	U.W & D.W	Central	U.W & D.W	Central	U.W & D.W	Central	U.W & D.W	Central
A	996	1437	967	1394	916	1322	906	1308	805	1170
B1	679	1062	624	975	559	874	512	800	438	684
B2	467	731	429	671	384	601	352	551	301	470

Roof Angle - 20° < α ≤ 30°

Wind Region	Building Height (m)									
	H ≤ 5		5 < H ≤ 10		10 < H ≤ 15		15 < H ≤ 20		20 < H ≤ 30	
	U.W & D.W	Central	U.W & D.W	Central	U.W & D.W	Central	U.W & D.W	Central	U.W & D.W	Central
A	986	1422	957	1379	907	1308	897	1294	797	1158
B1	672	1051	617	965	553	865	507	792	433	677
B2	410	642	377	589	337	528	309	483	265	413

Roof Angle - 30° < α ≤ 60°

Wind Region	Building Height (m)									
	H ≤ 5		5 < H ≤ 10		10 < H ≤ 15		15 < H ≤ 20		20 < H ≤ 30	
	U.W & D.W	Central	U.W & D.W	Central	U.W & D.W	Central	U.W & D.W	Central	U.W & D.W	Central
A	966	1393	937	1351	888	1282	879	1268	781	1134
B1	659	1030	605	945	541	847	497	776	425	663
B2	353	552	324	507	290	454	266	416	228	356

PV-ezRack SolarRoof Interface spacing tables

Type of Rail	ER-R-ECO & ER-R-ELT (Refer to Note 4 for other compatible rails)
Type of Interface	ER-I-41/EZC/ECO (Rail running perpendicular to rafter, L-bracket facing back) – Note 30
Solar Panel Dimension	1.7 m x 1 m (Refer to Note 18 for other panel sizes)
Terrain Category	2.5

Roof Angle - 0° < α ≤ 10°

Wind Region	Building Height (m)									
	H ≤ 5		5 < H ≤ 10		10 < H ≤ 15		15 < H ≤ 20		20 < H ≤ 30	
	U.W & D.W	Central	U.W & D.W	Central	U.W & D.W	Central	U.W & D.W	Central	U.W & D.W	Central
A	874	1236	848	1199	804	1137	795	1125	715	1043
B1	638	940	586	863	525	773	481	709	411	605
B2	510	751	468	689	419	618	384	566	328	483

Roof Angle - 10° < α ≤ 20°

Wind Region	Building Height (m)									
	H ≤ 5		5 < H ≤ 10		10 < H ≤ 15		15 < H ≤ 20		20 < H ≤ 30	
	U.W & D.W	Central	U.W & D.W	Central	U.W & D.W	Central	U.W & D.W	Central	U.W & D.W	Central
A	857	1212	832	1175	788	1115	780	1103	701	1022
B1	625	921	574	846	514	758	472	694	403	593
B2	454	668	416	614	373	550	342	504	292	430

Roof Angle - 20° < α ≤ 30°

Wind Region	Building Height (m)									
	H ≤ 5		5 < H ≤ 10		10 < H ≤ 15		15 < H ≤ 20		20 < H ≤ 30	
	U.W & D.W	Central	U.W & D.W	Central	U.W & D.W	Central	U.W & D.W	Central	U.W & D.W	Central
A	848	1200	823	1164	781	1104	772	1092	694	1012
B1	619	912	569	838	509	751	467	688	399	587
B2	398	586	365	538	327	482	300	441	256	377

Roof Angle - 30° < α ≤ 60°

Wind Region	Building Height (m)									
	H ≤ 5		5 < H ≤ 10		10 < H ≤ 15		15 < H ≤ 20		20 < H ≤ 30	
	U.W & D.W	Central	U.W & D.W	Central	U.W & D.W	Central	U.W & D.W	Central	U.W & D.W	Central
A	830	1175	806	1139	764	1081	756	1069	679	991
B1	606	893	557	820	498	735	457	673	391	575
B2	342	503	314	462	281	414	258	379	220	324

PV-ezRack SolarRoof Interface spacing tables

Type of Rail	ER-R-ECO & ER-R-ELT (Refer to Note 4 for other compatible rails)
Type of Interface	ER-I-41/EZC/ECO (Rail running perpendicular to rafter, L-bracket facing back) – Note 30
Solar Panel Dimension	1.7 m x 1 m (Refer to Note 18 for other panel sizes)
Terrain Category	2

Roof Angle - 0° < α ≤ 10°

Wind Region	Building Height (m)									
	H ≤ 5		5 < H ≤ 10		10 < H ≤ 15		15 < H ≤ 20		20 < H ≤ 30	
	U.W & D.W	Central	U.W & D.W	Central	U.W & D.W	Central	U.W & D.W	Central	U.W & D.W	Central
A	744	1064	722	1032	684	979	677	968	642	922
B1	456	777	419	713	375	639	344	585	294	500
B2	378	644	347	591	311	529	285	485	244	414

Roof Angle - 10° < α ≤ 20°

Wind Region	Building Height (m)									
	H ≤ 5		5 < H ≤ 10		10 < H ≤ 15		15 < H ≤ 20		20 < H ≤ 30	
	U.W & D.W	Central	U.W & D.W	Central	U.W & D.W	Central	U.W & D.W	Central	U.W & D.W	Central
A	730	1043	708	1012	671	960	664	949	629	904
B1	447	762	411	699	368	627	337	574	288	490
B2	336	572	308	525	276	471	253	431	217	368

Roof Angle - 20° < α ≤ 30°

Wind Region	Building Height (m)									
	H ≤ 5		5 < H ≤ 10		10 < H ≤ 15		15 < H ≤ 20		20 < H ≤ 30	
	U.W & D.W	Central	U.W & D.W	Central	U.W & D.W	Central	U.W & D.W	Central	U.W & D.W	Central
A	722	1032	701	1001	664	950	657	940	623	895
B1	443	754	406	692	364	620	334	568	285	485
B2	294	501	270	460	242	412	222	377	189	322

Roof Angle - 30° < α ≤ 60°

Wind Region	Building Height (m)									
	H ≤ 5		5 < H ≤ 10		10 < H ≤ 15		15 < H ≤ 20		20 < H ≤ 30	
	U.W & D.W	Central	U.W & D.W	Central	U.W & D.W	Central	U.W & D.W	Central	U.W & D.W	Central
A	707	1011	686	981	650	930	643	920	610	876
B1	434	738	398	678	356	607	327	556	279	475
B2	252	429	231	394	207	353	190	323	162	276

PV-ezRack SolarRoof Interface spacing tables

Type of Rail	ER-R-ECO & ER-R-ELT (Refer to Note 4 for other compatible rails)
Type of Interface	ER-I-41/EZC/ECO (Rail running perpendicular to rafter, L-bracket facing front) or (Rail parallel to rafter) – Note 30
Solar Panel Dimension	1.7 m x 1 m (Refer to Note 18 for other panel sizes)
Terrain Category	3

Roof Angle - 0° < α ≤ 10°

Wind Region	Building Height (m)									
	H ≤ 5		5 < H ≤ 10		10 < H ≤ 15		15 < H ≤ 20		20 < H ≤ 30	
	U.W & D.W	Central	U.W & D.W	Central	U.W & D.W	Central	U.W & D.W	Central	U.W & D.W	Central
A	766	1118	744	1084	705	1028	637	934	557	814
B1	559	803	514	737	460	660	376	534	321	465
B2	331	475	304	436	272	391	223	316	190	275

Roof Angle - 10° < α ≤ 20°

Wind Region	Building Height (m)									
	H ≤ 5		5 < H ≤ 10		10 < H ≤ 15		15 < H ≤ 20		20 < H ≤ 30	
	U.W & D.W	Central	U.W & D.W	Central	U.W & D.W	Central	U.W & D.W	Central	U.W & D.W	Central
A	751	1096	729	1063	691	1008	624	915	546	798
B1	548	787	503	722	451	647	369	524	315	456
B2	285	409	262	376	234	337	192	272	164	237

Roof Angle - 20° < α ≤ 30°

Wind Region	Building Height (m)									
	H ≤ 5		5 < H ≤ 10		10 < H ≤ 15		15 < H ≤ 20		20 < H ≤ 30	
	U.W & D.W	Central	U.W & D.W	Central	U.W & D.W	Central	U.W & D.W	Central	U.W & D.W	Central
A	743	1084	721	1052	684	998	618	906	541	790
B1	543	779	498	715	446	641	365	518	312	451
B2	239	343	220	315	197	282	161	228	137	199

Roof Angle - 30° < α ≤ 60°

Wind Region	Building Height (m)									
	H ≤ 5		5 < H ≤ 10		10 < H ≤ 15		15 < H ≤ 20		20 < H ≤ 30	
	U.W & D.W	Central	U.W & D.W	Central	U.W & D.W	Central	U.W & D.W	Central	U.W & D.W	Central
A	728	1062	707	1030	670	977	605	887	530	774
B1	532	763	488	700	437	627	357	508	305	442
B2	216	310	198	285	178	255	145	207	124	180

PV-ezRack SolarRoof Interface spacing tables

Type of Rail	ER-R-ECO & ER-R-ELT (Refer to Note 4 for other compatible rails)
Type of Interface	ER-I-41/EZC/ECO (Rail running perpendicular to rafter, L-bracket facing front) or (Rail parallel to rafter) – Note 30
Solar Panel Dimension	1.7 m x 1 m (Refer to Note 18 for other panel sizes)
Terrain Category	2.5

Roof Angle - 0° < α ≤ 10°

Wind Region	Building Height (m)									
	H ≤ 5		5 < H ≤ 10		10 < H ≤ 15		15 < H ≤ 20		20 < H ≤ 30	
	U.W & D.W	Central	U.W & D.W	Central	U.W & D.W	Central	U.W & D.W	Central	U.W & D.W	Central
A	687	996	667	966	632	916	526	797	495	725
B1	490	727	450	668	403	598	309	453	279	411
B2	305	453	280	416	251	373	193	283	174	256

Roof Angle - 10° < α ≤ 20°

Wind Region	Building Height (m)									
	H ≤ 5		5 < H ≤ 10		10 < H ≤ 15		15 < H ≤ 20		20 < H ≤ 30	
	U.W & D.W	Central	U.W & D.W	Central	U.W & D.W	Central	U.W & D.W	Central	U.W & D.W	Central
A	673	976	653	947	619	898	515	781	485	711
B1	480	713	441	654	395	586	303	444	274	403
B2	262	389	241	357	216	320	166	243	149	220

Roof Angle - 20° < α ≤ 30°

Wind Region	Building Height (m)									
	H ≤ 5		5 < H ≤ 10		10 < H ≤ 15		15 < H ≤ 20		20 < H ≤ 30	
	U.W & D.W	Central	U.W & D.W	Central	U.W & D.W	Central	U.W & D.W	Central	U.W & D.W	Central
A	667	967	647	938	613	889	510	773	480	704
B1	476	706	437	648	391	581	300	440	271	399
B2	219	325	201	299	180	268	138	203	125	184

Roof Angle - 30° < α ≤ 60°

Wind Region	Building Height (m)									
	H ≤ 5		5 < H ≤ 10		10 < H ≤ 15		15 < H ≤ 20		20 < H ≤ 30	
	U.W & D.W	Central	U.W & D.W	Central	U.W & D.W	Central	U.W & D.W	Central	U.W & D.W	Central
A	653	946	633	918	600	870	499	757	470	689
B1	466	691	427	634	383	568	294	431	265	391
B2	198	293	182	269	163	241	125	183	113	166

PV-ezRack SolarRoof Interface spacing tables

Type of Rail	ER-R-ECO & ER-R-ELT (Refer to Note 4 for other compatible rails)
Type of Interface	ER-I-41/EZC/ECO (Rail running perpendicular to rafter, L-bracket facing front) or (Rail parallel to rafter) – Note 30
Solar Panel Dimension	1.7 m x 1 m (Refer to Note 18 for other panel sizes)
Terrain Category	2

Roof Angle - 0° < α ≤ 10°

Wind Region	Building Height (m)									
	H ≤ 5		5 < H ≤ 10		10 < H ≤ 15		15 < H ≤ 20		20 < H ≤ 30	
	U.W & D.W	Central	U.W & D.W	Central	U.W & D.W	Central	U.W & D.W	Central	U.W & D.W	Central
A	580	827	563	802	534	760	433	626	406	583
B1	434	645	399	592	357	531	262	396	252	369
B2	280	416	257	382	230	342	169	255	162	238

Roof Angle - 10° < α ≤ 20°

Wind Region	Building Height (m)									
	H ≤ 5		5 < H ≤ 10		10 < H ≤ 15		15 < H ≤ 20		20 < H ≤ 30	
	U.W & D.W	Central	U.W & D.W	Central	U.W & D.W	Central	U.W & D.W	Central	U.W & D.W	Central
A	569	810	552	786	523	746	425	613	398	572
B1	426	633	391	581	350	520	257	388	247	362
B2	240	356	220	327	197	293	145	219	139	204

Roof Angle - 20° < α ≤ 30°

Wind Region	Building Height (m)									
	H ≤ 5		5 < H ≤ 10		10 < H ≤ 15		15 < H ≤ 20		20 < H ≤ 30	
	U.W & D.W	Central	U.W & D.W	Central	U.W & D.W	Central	U.W & D.W	Central	U.W & D.W	Central
A	563	802	547	778	518	738	420	607	394	566
B1	422	626	387	575	347	515	254	385	245	358
B2	200	297	184	273	164	244	121	182	116	170

Roof Angle - 30° < α ≤ 60°

Wind Region	Building Height (m)									
	H ≤ 5		5 < H ≤ 10		10 < H ≤ 15		15 < H ≤ 20		20 < H ≤ 30	
	U.W & D.W	Central	U.W & D.W	Central	U.W & D.W	Central	U.W & D.W	Central	U.W & D.W	Central
A	551	785	535	762	507	723	412	595	386	554
B1	413	613	379	563	339	504	249	377	239	351
B2	180	267	165	245	148	220	109	164	104	153

PV-ezRack SolarRoof Interface spacing tables

Type of Rail	ER-R-ECO & ER-R-ELT (Refer to Note 4 for other compatible rails)
Type of Interface	ER-I-61/EZC/ECO (Rail running perpendicular or parallel to rafter)
Solar Panel Dimension	1.7 m x 1 m (Refer to Note 18 for other panel sizes)
Terrain Category	3

Roof Angle - 0° < α ≤ 10°

Wind Region	Building Height (m)									
	H ≤ 5		5 < H ≤ 10		10 < H ≤ 15		15 < H ≤ 20		20 < H ≤ 30	
	U.W & D.W	Central	U.W & D.W	Central	U.W & D.W	Central	U.W & D.W	Central	U.W & D.W	Central
A	616	916	598	889	567	843	394	559	367	532
B1	462	682	424	626	380	561	229	323	196	284
B2	236	348	216	319	194	286	117	164	100	145

Roof Angle - 10° < α ≤ 20°

Wind Region	Building Height (m)									
	H ≤ 5		5 < H ≤ 10		10 < H ≤ 15		15 < H ≤ 20		20 < H ≤ 30	
	U.W & D.W	Central	U.W & D.W	Central	U.W & D.W	Central	U.W & D.W	Central	U.W & D.W	Central
A	604	898	586	871	556	826	386	548	359	522
B1	453	669	416	614	372	550	225	316	192	279
B2	198	292	181	268	162	240	98	138	84	121

Roof Angle - 20° < α ≤ 30°

Wind Region	Building Height (m)									
	H ≤ 5		5 < H ≤ 10		10 < H ≤ 15		15 < H ≤ 20		20 < H ≤ 30	
	U.W & D.W	Central	U.W & D.W	Central	U.W & D.W	Central	U.W & D.W	Central	U.W & D.W	Central
A	598	889	580	862	550	818	382	542	356	516
B1	448	662	412	608	368	544	222	313	190	276
B2	160	236	147	216	131	194	79	111	68	98

Roof Angle - 30° < α ≤ 60°

Wind Region	Building Height (m)									
	H ≤ 5		5 < H ≤ 10		10 < H ≤ 15		15 < H ≤ 20		20 < H ≤ 30	
	U.W & D.W	Central	U.W & D.W	Central	U.W & D.W	Central	U.W & D.W	Central	U.W & D.W	Central
A	586	871	568	845	539	801	375	531	348	506
B1	439	648	403	595	361	533	218	307	186	270
B2	141	208	129	191	116	171	70	98	60	86

PV-ezRack SolarRoof Interface spacing tables

Type of Rail	ER-R-ECO & ER-R-ELT (Refer to Note 4 for other compatible rails)
Type of Interface	ER-I-61/EZC/ECO (Rail running perpendicular or parallel to rafter)
Solar Panel Dimension	1.7 m x 1 m (Refer to Note 18 for other panel sizes)
Terrain Category	2.5

Roof Angle - 0° < α ≤ 10°

Wind Region	Building Height (m)									
	H ≤ 5		5 < H ≤ 10		10 < H ≤ 15		15 < H ≤ 20		20 < H ≤ 30	
	U.W & D.W	Central	U.W & D.W	Central	U.W & D.W	Central	U.W & D.W	Central	U.W & D.W	Central
A	562	824	545	799	517	758	369	524	344	499
B1	410	602	377	552	337	495	215	302	184	266
B2	220	322	202	296	181	265	115	162	98	143

Roof Angle - 10° < α ≤ 20°

Wind Region	Building Height (m)									
	H ≤ 5		5 < H ≤ 10		10 < H ≤ 15		15 < H ≤ 20		20 < H ≤ 30	
	U.W & D.W	Central	U.W & D.W	Central	U.W & D.W	Central	U.W & D.W	Central	U.W & D.W	Central
A	551	808	535	784	507	743	362	513	337	489
B1	402	590	369	541	331	485	211	296	180	261
B2	184	269	169	247	151	222	96	135	82	119

Roof Angle - 20° < α ≤ 30°

Wind Region	Building Height (m)									
	H ≤ 5		5 < H ≤ 10		10 < H ≤ 15		15 < H ≤ 20		20 < H ≤ 30	
	U.W & D.W	Central	U.W & D.W	Central	U.W & D.W	Central	U.W & D.W	Central	U.W & D.W	Central
A	545	800	529	776	502	736	358	508	333	484
B1	398	584	365	536	327	480	208	293	178	258
B2	148	216	135	199	121	178	77	109	66	96

Roof Angle - 30° < α ≤ 60°

Wind Region	Building Height (m)									
	H ≤ 5		5 < H ≤ 10		10 < H ≤ 15		15 < H ≤ 20		20 < H ≤ 30	
	U.W & D.W	Central	U.W & D.W	Central	U.W & D.W	Central	U.W & D.W	Central	U.W & D.W	Central
A	534	783	518	760	491	720	351	497	326	474
B1	390	572	358	525	320	470	204	287	174	253
B2	130	190	119	175	107	156	68	96	58	84

PV-ezRack SolarRoof Interface spacing tables

Type of Rail	ER-R-ECO & ER-R-ELT (Refer to Note 4 for other compatible rails)
Type of Interface	ER-I-61/EZC/ECO (Rail running perpendicular or parallel to rafter)
Solar Panel Dimension	1.7 m x 1 m (Refer to Note 18 for other panel sizes)
Terrain Category	2

Roof Angle - 0° < α ≤ 10°

Wind Region	Building Height (m)									
	H ≤ 5		5 < H ≤ 10		10 < H ≤ 15		15 < H ≤ 20		20 < H ≤ 30	
	U.W & D.W	Central	U.W & D.W	Central	U.W & D.W	Central	U.W & D.W	Central	U.W & D.W	Central
A	506	737	491	714	465	678	352	499	328	475
B1	369	538	339	494	304	442	205	288	175	254
B2	204	297	187	273	168	244	113	159	97	140

Roof Angle - 10° < α ≤ 20°

Wind Region	Building Height (m)									
	H ≤ 5		5 < H ≤ 10		10 < H ≤ 15		15 < H ≤ 20		20 < H ≤ 30	
	U.W & D.W	Central	U.W & D.W	Central	U.W & D.W	Central	U.W & D.W	Central	U.W & D.W	Central
A	496	722	481	701	456	664	345	489	321	466
B1	362	527	332	484	298	434	201	283	172	249
B2	170	248	156	227	140	204	94	133	81	117

Roof Angle - 20° < α ≤ 30°

Wind Region	Building Height (m)									
	H ≤ 5		5 < H ≤ 10		10 < H ≤ 15		15 < H ≤ 20		20 < H ≤ 30	
	U.W & D.W	Central	U.W & D.W	Central	U.W & D.W	Central	U.W & D.W	Central	U.W & D.W	Central
A	491	715	476	693	452	658	342	484	318	461
B1	358	522	329	479	295	429	199	280	170	246
B2	136	198	125	182	112	163	75	106	64	93

Roof Angle - 30° < α ≤ 60°

Wind Region	Building Height (m)									
	H ≤ 5		5 < H ≤ 10		10 < H ≤ 15		15 < H ≤ 20		20 < H ≤ 30	
	U.W & D.W	Central	U.W & D.W	Central	U.W & D.W	Central	U.W & D.W	Central	U.W & D.W	Central
A	481	700	467	679	442	644	335	474	311	452
B1	351	511	322	469	288	420	195	274	166	241
B2	119	173	109	159	98	143	66	93	56	82

General Notes

Note 1. Tile Roof Interface Spacing tables based on a minimum depth into F7 (Pine) timber of 25mm.

Note 2. This engineering document was designed to cater for most common installation scenarios however, it does not cater for all of them. Contact Clenergy if you are unable to comply with any of the installation specifications listed on this document.

Note 3. Standard screws shipped for Tile Roof Interfaces

Wood Purlins and Rafters	Fasteners to be used
Timber F7 (Pine) and Timber 17 (Hardwood).	Buildex- 14 - 11 x 70 Hex Head Zips Climaseal 3 with 16 mm ABW or 14-10 x 50 Hex Head T17 with 16mm ABW Climaseal 3 or 14-10 x 65 mm Hex Head T17 Climaseal 3 or other screw of pullout value not less than screws above.

Note 4. The following components are satisfied for use according to AS/NZS 1664.1:1997-Amdt 1:1999 and AS/NZS 1170.2:2021

Components	Part No.	Description
Elite Rail	ER-R-ELT/XXXX	Elite Rail
ECO-Rail	ER-R-ECO/XXXX	ECO Rail
Splice	ER-SP-ECO	PV-ezRack Splice for ECO rail
Australian Made Mill Finish ECO Rail	R-ECO/XXXX/AUMF	PV-ezRack Australian Made Mill Finish ECO Rail
ST-Rail	ER-R-STXXXX	Standard Rail
Splice	ER-SP-ST	PV-ezRack Splice for Standard Rail 200mm
ECO Rail Black	ER-R-ECO/XXXX/BA	ECO Rail Black
Black Splice ECO Rail	ER-SP-ECO/BA	Splice ECO Rail Black
Inter Clamp	ER-IC-STXX	Inter Clamp = clamp + Z-Module + Bolt.

End Clamp	ER-EC-STXX	End Clamp = clamp + Z-Module + bolt
Clamp	C-U/30/46-G	Akashi Clamp for Frame Height 30-46mm with Grounding Clip
Clamp	C-U/30/46	Akashi Clamp for Frame Height 30-46mm
End Clamp	ER-EC-DU35/40	End Clamp dual 35 or 40mm
End Clamp	ER-EC-DU40/46	End Clamp dual 40 or 46mm
Inter Security Clamp	ER-IC-STXX/S	Inter Clamp = Clamp + Z-Module + Security Bolt
End Security Clamp	ER-EC-STXX/S	End Clamp = Clamp + Z-Module + Security Bolt
Interface	ER-I-41/EZC/ECO	Adjustable Tile Interface (Aluminium)
Interface	ER-I-61/EZC/ECO	Adjustable Tile Interface (Aluminium)
End Clamp (*)	EC-FL/GE/XX/XX	End Clamp for Frameless Module (glued EPDM)
Inter Clamp (*)	IC-FL/GE/XX/XX	Inter Clamp for Frameless Module (glued EPDM)
End Clamp (*)	ER-EC-FL/XX/XX	End Clamp for Frameless Module
Inter Clamp (*)	ER-IC-FL/XX/XX	Inter Clamp for Frameless Module
Black End Clamp (*)	EC-FL/GE/XX/XX/B	Black End Clamp for Frameless Module (glued EPDM)
Black Inter Clamp (*)	IC-FL/GE/XX/XX/B	Black Inter Clamp for Frameless Module (glued EPDM)
Mid Clamp XX Black	ER-IC-STXXB	Inter Clamp XX Black

End Clamp XX Black	ER-EC-STXXB	End Clamp XX Black
Black Akashi Clamp	C-U/30/46-BA	Black Akashi Clamp
Black Akashi Clamp	C-U/30/46-G-BA	Black Akashi Clamp with grounding clip

(*) Subject to the panel manufacturer's installation guide.

Note 5. For Terrain Category (TC) definition, please refer to clause 4.2.1 of AS/NZS 1170.2:2021

Note 6. Topographic Multiplier (Mt) taken as 1.0. Refer to clause 4.4 of AS/NZS 1170.2:2021 for more information.

For topographic Multiplier (Mt) more than 1.0 (installations on a mountain, hilly or sloped terrain) please refer to clause 4.4 of AS/NZS 1170.2:2021 to define appropriate Topographic multiplier value.

The below table provides a reduction factor applied for topographic multipliers greater than 1 (installation on a slope, hill on mountain). To achieve a more accurate and cost-effective design, please contact Clenergy Engineering department.

Mt	**A, B1, B2**	
	U.W & D. W	**Central**
1	1	1
1.01	1.00	1.00
1.02	1.00	1.00
1.03	0.92	0.94
1.04	0.92	0.94
1.06	0.92	0.88
1.08	0.85	0.88
1.09	0.85	0.81
1.1	0.85	0.81
1.2	0.69	0.69
1.3	0.54	0.56
1.4	0.46	0.50
1.5	0.38	0.44

Note 7. Shielding Multiplier (Ms) taken as 1.0. Refer to clause 4.3 of AS/NZS 1170.2:2021 for more information.

Note 8. Wind Direction Multiplier (Md) taken as 1.0. Refer to clause 3.3 of AS/NZS 1170.2:2021 for more information.

Note 9. The installed frame must comply with the clamping zone of the PV Panel.

Note 10. Capacities checked and compared against testing data from Clenergy Australia and MTS (NATA certified).

Note 11. For the definition of roof zones, refer to Appendix B6 of the AS/NZS 1170.2:2021 standard.

Note 12. From the date of publication onwards, any amendment made to any of the above-mentioned Standards will make this report outdated and a new one will have to be released, unless the amendment has no implications on this certificate.

Note 13. No consideration has been taken on the effect that the solar panel will have over the roof structure. It has been assumed that the roof will be able to resist the additional loadings imposed by the installation of the solar panels in conjunction with the Clenergy Mounting System.

Note 14. All components from Clenergy must be installed according to manufacturer's specification and the instructions shown in the relevant installation manual. Please check the Clenergy Australia website or contact them for access to the most recent installation manuals.

Note 15. No consideration has been taken on the effect of snow loads. In case the roof is located in a snow prone area, a special design must be made.

Note 16. No consideration has been taken on the effect of earthquake loads.

Note 17. This Engineering report is based on 1.7 m x 1 m panels and two rails per panel. However, a percentage increase or decrease could be applied on all interface spacings as shown on the following table.

Number of rails per panel	Panel length (mm)	Spacing +/-
2 rails	≤ 1700	0%
3 rails	≤ 1700	12%
4 rails	≤ 1700	17%
2 rails	≤ 2000	-10%
3 rails	≤ 2000	10%
4 rails	≤ 2000	15%
2 rails	≤ 2100	-12%
3 rails	≤ 2100	8%
4 rails	≤ 2100	12%

Note 18. Panel width cannot exceed 1.20 m for any of the above panel length dimensions and panel weight cannot exceed 15 kg/m^2.

Note 19. This document does not cover the building frame capacity. It has been assumed that the building frame will be able to resist the additional loadings imposed by the installation of the solar panels in conjunction with the Clenergy mounting system.

Note 20. Rail overhang ends where the panel finishes and this should be less than 40% of the last installed interface spacing.

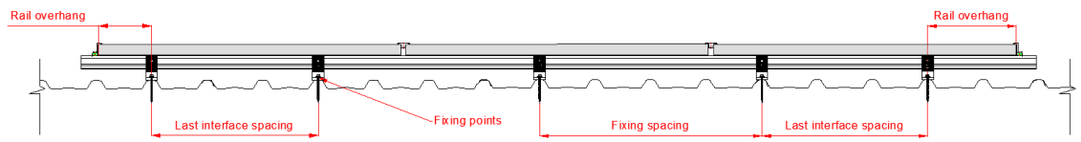

Note 21. ER-R-ECO rail splice can only be installed within 1/3 of the fixing spacing (centre to centre) from the nearest interface when fixing spacing is over 1700 mm.

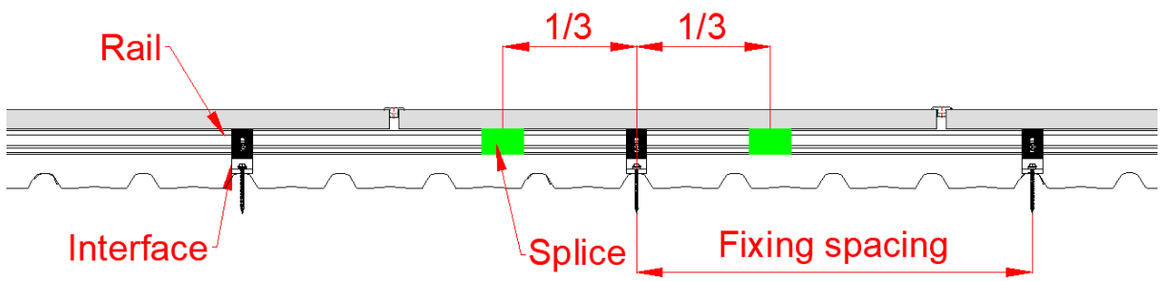

Note 22. ER-R-ECO rail splice cannot be installed on overhangs.

Note 23. Neither Clenergy nor MW Engineering Melbourne are to be responsible for external factors leading to compression of the tile interfaces.

Note 24. General conditions

Note 24.1 Timber Grade members: F7 (Pine) and F17 (Hardwood).

Note 24.2 If any of the screws of the interfaces go into pre-existing holes, they will have to be one size up compared to the screws that were previously installed. This is to ensure that the pullout capacity remains the same or higher.

Note 25. A minimum of two (2) screws per Tile Interface will be required for installation.

Note 26. Use the same spacing listed on the tables of this certificate for panels installed in landscape.

Note 27. Bracket orientation as per below pictures

Adjustable bracket (L-bracket facing back)

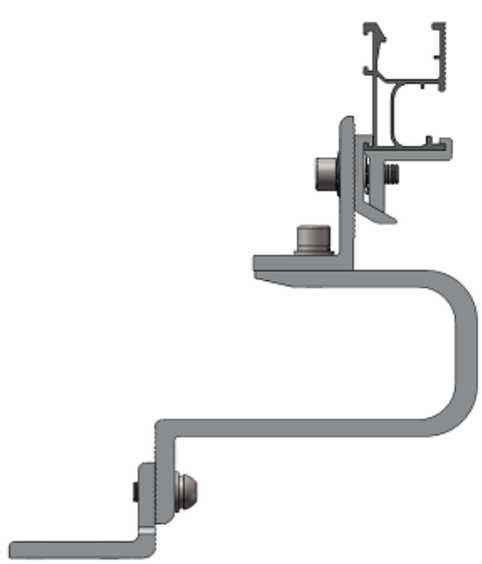

Adjustable bracket (L-bracket facing front)

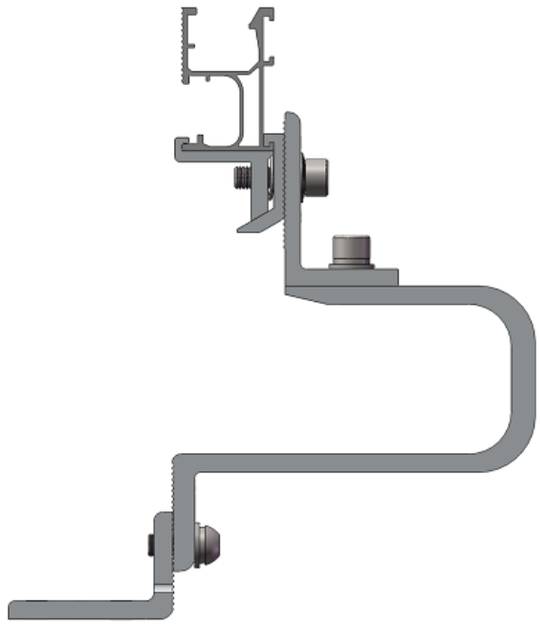

Note 28. Conditions for flush mounted systems installed on flat and pitched roofs according to the B6 Appendix of the AS/NZS 1170.2:2021.

- Roof pitch to be between 1° and 30°.
- h/d ≤ 0.5 and h/b ≤ 0.5. Being h= height, b= width and d= length of the building as per the below picture.
- Gap between the underside of the panel and the roof to be no less than 50mm and no more than 300mm.

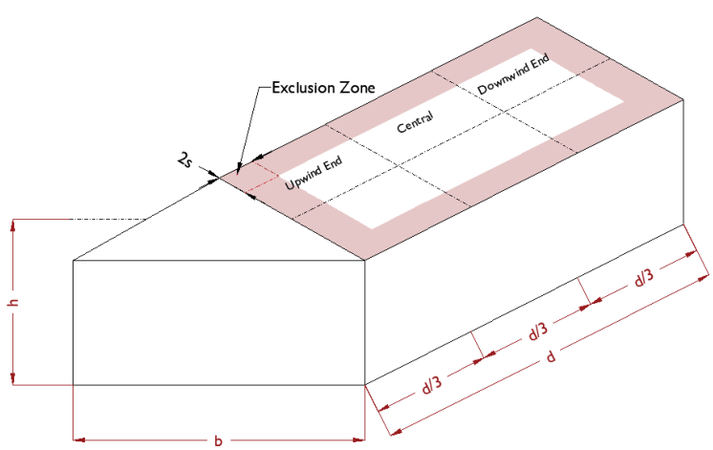

Note 29. Exclusion zone for flush installation to be the minimum distance from the edge of the roof "2s", where "s" is the gap between the underside of the panel and the roof.

Note 30. Please contact Clenergy if the installation doesn't meet the parameter on section B6 part (d) of the AS/NZS 1170.2:2021 standard for roof angle is between 1° to 30°.

PV-ezRACK®

Clenergy

1/10 Duerdin St
Clayton VIC 3168
Australia

Phone: +61 3 9239 8088
Email: sales@clenergy.com.au
Web: www.clenergy.com.au

@ClenergyGlobal / @ClenergyClub / ClenergyAUS @Clenergy @ClenergyClub
@Clenergy_global @Clenergy

A Clenergy Technologies Company